BASIC PRACTICE ON ELECTRICAL TECHNOLOGY (Π)

DIGITAL CIRCUIT EXPERIMENTS

ELECTRIC AND ELECTRONIC CENTER OF BUAA

September 2013

CONTENTS

Basic Requirements and Remarks for Digital Circuit Experiment 3

Experiment 1 The 555 Timer Applications 5

Experiment 2 TTL NAND Gate and CMOS Gate Circuits 13

Experiment 3 Combinational Logic and Sequential Logic Circuit Design..... 19

Experiment 4 Simple Digital Cymometer 31

Experiment 5 Sequential Lock 39

Experiment 6 Digitalized Signal Generator 46

Experiment 7 Dynamic Scan Display System Design 53

Appendix Ⅰ Commonly Used Digital Integration Circuit Pin-out Diagrams 59

Basic Requirements and Remarks for

Digital Circuit Experiment

1. **Overview**

This is a practical course, which is designed to teach students the practice fundamentals in operating digital systems. Both combinational and sequential circuit design and construction are covered. Several logic gates and memory circuits are introduced. Troubleshooting procedures and problem solving are covered. Hands-on equipment and practical application design are emphasized. Typical applications are practiced.

2. **Requirements**

There are 9 times in Digital Electronics laboratory, with 4 hours allocated to each time. Attendance is compulsory. Here are some guidelines to help you perform the experiments and to submit the reports. Please observe the following dos and don'ts.

(1) Have fully preparation before experiments. Based on experiment requirements, design and draw down circuit diagrams yourself, indicating ICs pin number. Commonly used ICs pin-out diagrams are shown in Appendix I. Regarding to the contents operated on computers, read software instructions carefully.

(2) In digital circuit experiment, components are inserted in DIP integration sockets. In order to connect wires and find faults, all ICS normally inserted in same direction avoiding misuse pins.

(3) Normally the ICs used in experiments are DIP package. Before installation, please check if the IC pins are in good order and straight. When install ICs, make sure all pins are corresponding to sockets' holes, and then press gently by hand to have tight and good touch of all pins and socket holes. When removing ICs, pull up from the two ends slowly to make IC move up as a whole to avoid damaging IC pins (bent or broken).

(4) When doing experiment, wires arrangement should be in order and connections be reliable. For checking and replacing convenience, wires should be around ICs instead of crossing ICs, and not cover the holes unused.

(5) The wiring sequence is normally connecting POWER and GROUND first, and then connecting inputs, outputs and other control wires. For those complicated circuit, make wires in blocks, and debug one by one, and debug in whole finally. Don't make mistake with IC POWER and GROUND, otherwise IC will burn.

(6) Switch off the power supply first in the case of an emergency, or correction of wires. Wiring with power is prohibited.

(7) When debugging, if expected results can not be achieved, check the voltage of power and ground wires first, and then check if the relation between inputs and outputs are normal. For sequential circuit, checking if CLOCK input is normal.

(8) After finishing experiment, ask the teacher to examine results. The operator should briefly introduce experiment procedure, and fully demonstrate results.

Finally hand in reports at class.

(9) After experiments, put instruments and wires into order, and examine used ICs according to teacher's requirements.

Experiment 1 The 555 Timer Applications

1. Aim

1) To master the circuit structure and functional principle of 555 timer.
2) To design and test application circuits by 555 timers.

2. Introduction to the Theory

The 555 timer is a versatile and widely used IC device because it can be configured in two different modes as either a monostable multivibrator (one –shot) or as an astable multivibrator (pulse oscillator) between two unstable states without any external triggering.

2.1 **The internal components of a 555 timer**

A functional diagram showing the internal components of a 555 timer is shown in Figure 1.1 (pin numbers are in parenthesis).

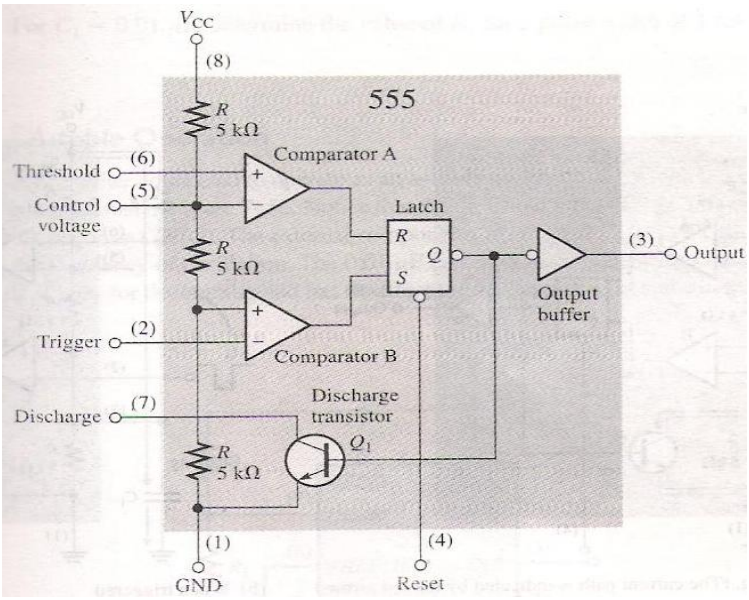

Figure 1.1 Internal Function Diagram of a 555 Timer

The circuit consists of two comparators, an R-S latch, the output, a discharge transistor and three resistors voltage divider. The comparators are devices whose outputs are HIGH when the voltage on the positive (+) input is greater than the voltage on the negative (-) input and LOW when the (-) input voltage is greater than the (+) input voltage. The voltage divider consisting of three 5KΩ resistors provides a trigger level of $1/3\,V_{cc}$ and a threshold level of $2/3\,V_{cc}$.

When normally HIGH trigger input momentarily goes below $1/3\,V_{cc}$, the output of comparator B switches from LOW to HIGH and sets the S-R latch, causing the output (pin 3) to go HIGH and turning the discharge transistorQ_1 off. The output

will stay HIGH until the normally LOW threshold input goes above $2/3\,V_{cc}$ and causes the output of comparator A to switch from LOW to HIGH. This resets the latch, causing the output to go back LOW and turning the discharge transistor on. The trigger and threshold inputs (pins 2 and 6) are controlled by external components connected to produce either monostable or astable action.

The 555 timer function is shown in table 1.1

Table 1.1 555 Timer Function

Inputs			Output	
$\overline{R}$	TH	$\overline{TR}$	Q1	OUT
0	X	X	On	LOW
1	$> \frac{2}{3}Vcc$	$> \frac{1}{3}Vcc$	On	LOW
1	$< \frac{2}{3}Vcc$	$> \frac{1}{3}Vcc$	Holding	Holding
1	$< \frac{2}{3}Vcc$	$< \frac{1}{3}Vcc$	Off	HIGH
1	$> \frac{2}{3}Vcc$	$< \frac{1}{3}Vcc$	Off	HIGH

2.2 The pins' functions of 555 timer IC

Figure 1.2 is the pin diagram of a 555 timer.

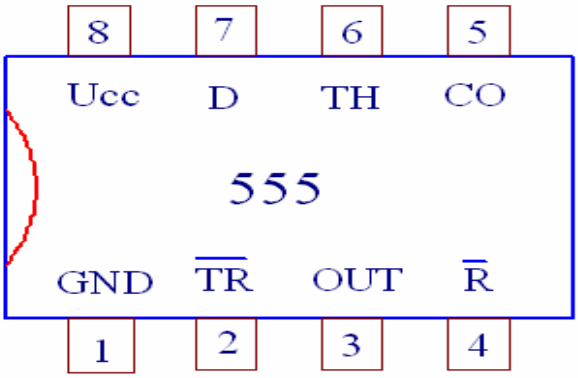

Figure 1.2 555 Timer Pin Diagram

Pin1 is usually connected to ground. Its voltage is lower than any other pins.

Pin2 (trigger TR), trigger voltage is $1/3$ V_{cc}, when its voltage is lower than $1/3$ V_{cc}, the output will be HIGH. The permitted voltage ranges from $0 \sim Vcc$.

Pin3, the output is usually Low, and HIGH when triggered.

Pin 4, the external reset input can be used to reset the latch independent of the threshold circuit. The timer can be triggered only if pin4 voltage is more than 1V.

Pin5, the control voltage input can be used to externally adjust the trigger and

threshold levels if necessary. When unnecessary, it can be connected to a decoupling capacitor to prevent noise from affecting the trigger and threshold levels. Its voltage range is 0～Vcc.

Pin 6, the threshold, when >2/3 V_{cc}, the timer is reset, the output is LOW. It is 0～Vcc.

Pin7 is connected to the discharge transistor.

Pin 8 is connected to power from 4.5～16V.

2.3 Typical application circuits of a 555 timer

1) Monostable Multivibrator (One-Shot)

An external resistor and capacitor connected as shown in Figure 1.3 are used to set up the 555 timer as a nonretriggerable one-shot. The pulse width of the output is determined by the time constant of R_1 and C_1 according to the following formula:

$$t_w = 1.1R_1C_1$$

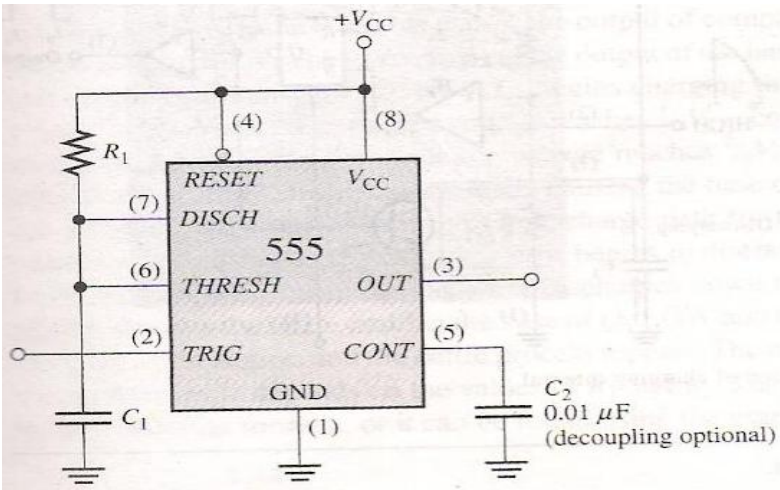

Figure 1.3 The 555 Timer Connected as a Monostable Multivibtator

Before a trigger pulse is applied, the output is LOW and the discharge transistor Q_1 is *on*, keeping C_1 discharged. When a negative-going trigger pulse is applied at t_0, the output goes HIGH and the discharge transistor turns *off*, allowing capacitor C_1 to begin charging through R_1. When C_1 charges to 2/3 V_{cc}, the output goes back LOW at t_1 and Q_1 turns on immediately, discharging C_1 as shown in Figure 1.4. As you can see, the charging rate of C_1 determines how long the output is HIGH.

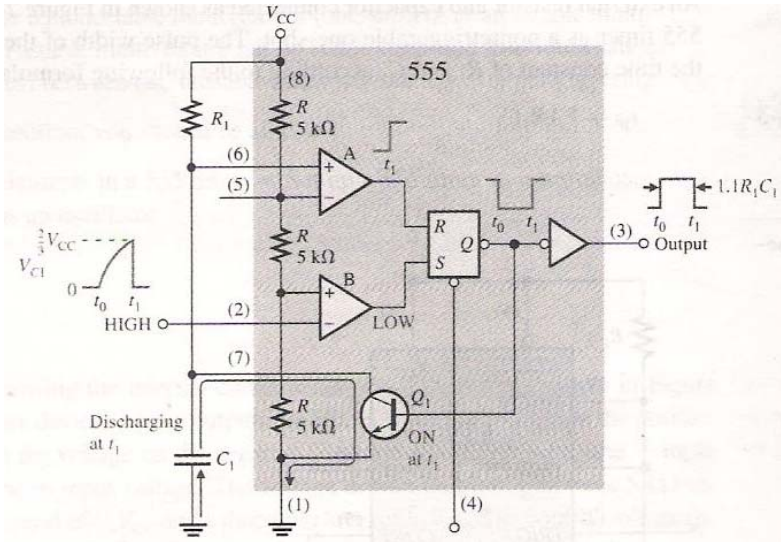

Figure 1.4 At End of Charging Interval

2) Astable Multivibrator (Oscillator)

When the threshold input (THRESH) is connected to the trigger input (TRIG), a 555 timer operates as an astable multivibrator, which is a nonsinusoidal oscillator, shown in Figure 1.5. The external components R_1, R2, and C_1 form the timing network that sets the frequency of oscillation. The capacitor C_2, connected to the control (CONT) input is strictly for decoupling and has no effect on the operation; in some cases it can be left off.

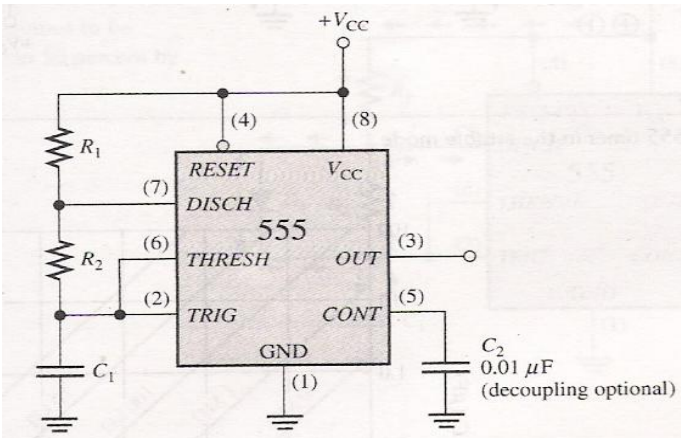

Figure 1.5 The 555 Timer Connected as an Astable Multivibrator

Initially, when the power is turned on, the capacitor (C_1) is uncharged and thus the trigger voltage (pin2) is at 0V. This causes the output of comparator B to be HIGH and the output of comparator A to be LOW, forcing the output of latch, and thus the base of Q_1, LOW and keeping the transistor off. Now, C_1 begins charging through R_1 and R_2, as indicated in Figure 1.6. When the capacitor voltage reaches $1/3\,V_{cc}$, comparator B switches to its LOW output state; and when the capacitor voltage reaches $2/3\,V_{cc}$, comparator A switches to its HIGH output state. This resets the latch, causing the base

of Q_1 to go HIGH and turning on the transistor. This sequence creates a discharge path for the capacitor through R_2 and the transistor, as indicated. The capacitor now begins to discharge, causing comparator A to go LOW. At the point where the capacitor discharges down to $1/3\,V_{cc}$, comparator B switches HIGH; this sets the latch, making the base of Q_1 LOW and turning off the transistor. Another charging cycle begins, and the entire process repeats.

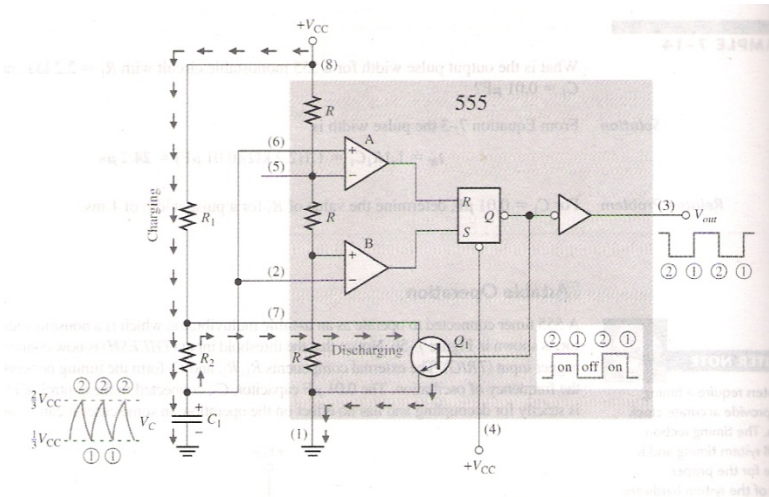

Figure 1.6 Operation of the 555 Timer in the Astable Mode

The result is a rectangular wave output whose duty cycle depends on the values of R_1 and R_2. The frequency of oscillation is given by the following formula.

$$f = \frac{1.44}{(R_1 + 2R_2)C_1}$$

By selecting R_1 and R_2, the duty cycle of the output can be adjusted. The time that the output is HIGH (t_H) is how long it takes C_1 to charge from $1/3\,V_{cc}$ to $2/3\,V_{cc}$. It is expressed as

$$t_H = 0.7(R_1 + R_2)C_1$$

The time that output is LOW (t_L) is how long it takes C_1 to discharge from $2/3\,V_{cc}$ to $1/3\,V_{cc}$. It is expressed as

$$t_L = 0.7R_2C_1$$

The period T of the output waveform is the sum of t_H and t_L.

$$T = T_H + T_L = 0.7(R_1 + 2R_2)C_1$$

Finally, the duty cycle D is

$$D = \frac{t_H}{T} = \frac{t_H}{t_H + t_L} = \left(\frac{R_1 + R_2}{R_1 + 2R_2}\right) 100\%$$

To achieve adjustable duty cycles, the circuit can be modified so that C_1 charges through only R1 and discharges through R2. This is achieved by two diodes D_1 and D_2 as shown in Figure 1.7. The expression for the duty cycle should be as following:

$$D = \left(\frac{R_1}{R_1+R_2}\right)100\%$$

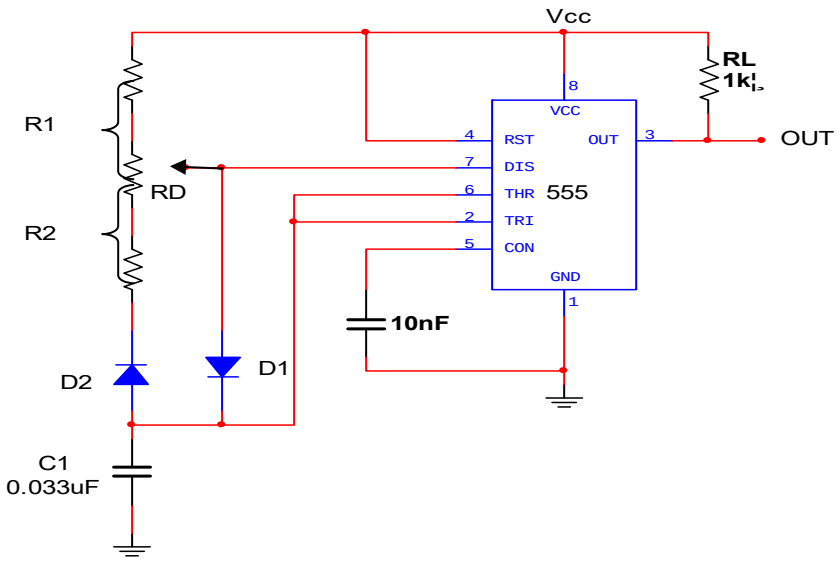

Figure 1.7 Duty Adjustable Oscillator

3) Touching switch circuit

A timing circuit and some attached components can make up of a multipurpose, convenient and reliable touching switch shown in Figure 1.8.

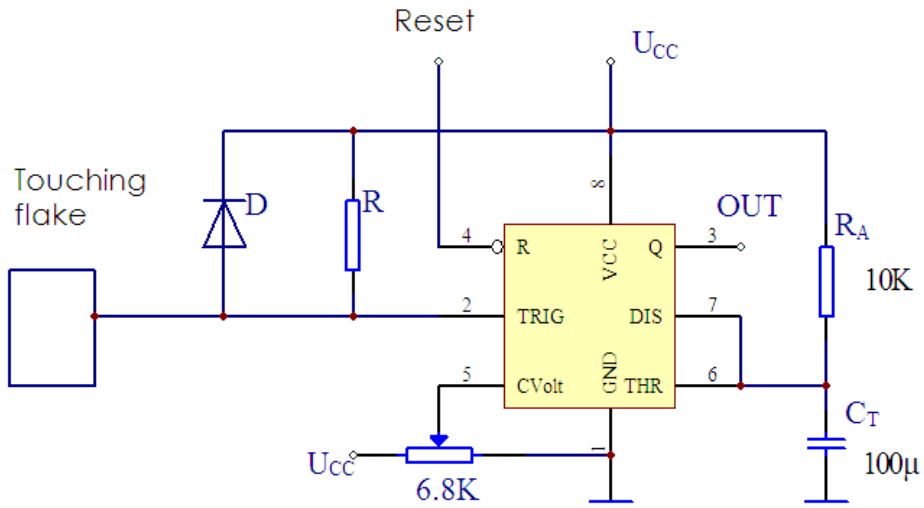

Figure 1.8 Touching Switch Circuit

4) Simple capacitor testing circuit

Figure 1.9 is a simple capacitor testing circuit consisting of two 555s, which can test capacitors between 10pF--1uF.

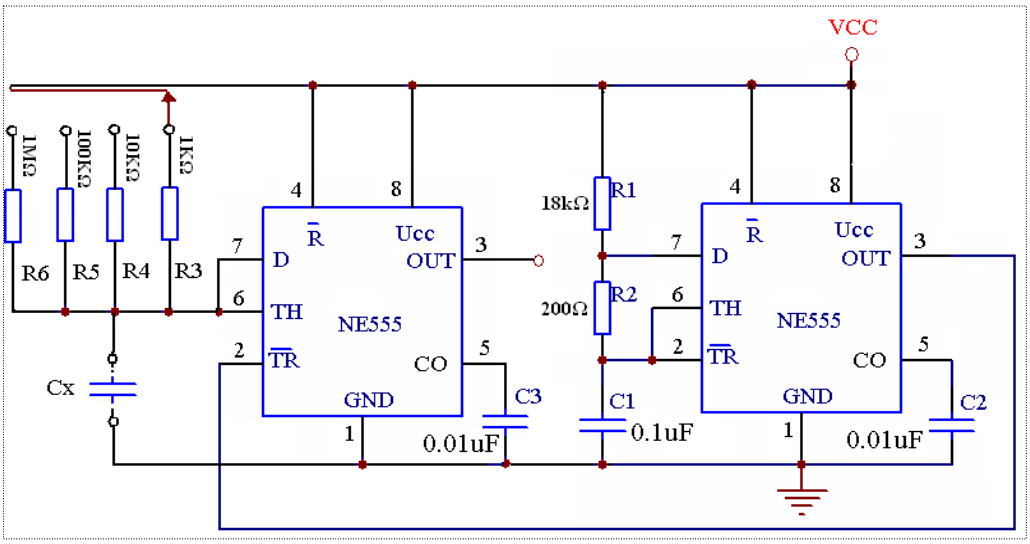

Figure 1.9 Simple Capacitor Testing Circuit

The 555 on the right and its peripheral components R1、R2、C1、C2 make up of an astable multivibrator (oscillator), and the one on the left and the peripheral components make up of a monostable multivibrator (one-shot). The output of the oscillator is connected to pin 2 of one-shot acting as its triggering input. The width of the one-shot's output pulse is decided by R3--R6 and C_X. According to the following formula, the value of C_X can be deduced by the selected range resistor and pulse width.

$$C=t/1.1R$$

Therein R is range resistor. In Figure 2.9, R3--R6 are range resistors for selecting, and the corresponding capacitors are as following:

Resistor	1M	100K	10K	1K
Capacitor	100-1000pF	1000pF-0.01uF	0.01uF-0.1uF	0.1uF-1uF

3. Pre Laboratory

1) Familiarize yourself with the principle and circuit structures of 555 timers.
2) Design circuits according to experiment requirements.

4. Experiment Requirements

1) Select R_1 and C_1 to design a one-shot circuit, making the pulse width of the output is 5s.
2) Design an oscillator making f=1KHz and duty adjustable with reference to Figure 2.7. Adjust R_D, observing the waveforms change at pin 3 on CRO. Measure t_H and t_L, calculate the duty value. Draw the waveform with the maximum and minimum duties.
3) Touching switch circuit. Design a hand-touching switch circuit. The touching flake can be replaced by a piece of wire. Adjust the accuracy by turning the potentiometer to keep it work reliably. Watching the output waves on CRO.
4) Capacitor testing circuit. Build the capacitor testing circuit, checking if it can get

oscillation by observing on CRO. Test the following capacitors: 0.1uF, two 0.1uF in parallel；0.01uF, two 0.01uF in parallel ；0.001uF, two 0.001uF in parallel by selecting corresponding testing resistors.

5. Apparatus Supplied

IC 555 timer, power supply, oscilloscope, multimeter, resistors, capacitors, etc.

6. Precautions

1) Make the connections according to the IC pin-out diagram, and the connections should be tight.
2) The Vcc and ground should be applied carefully at the specified pin only. Vcc =5—10V.
3) Switch off power while connecting or disconnecting wires.
4) When observing waves of 5s time and hand-touching switch circuits, 500ms/div for CRO time base is better used.
5) In oscillator circuit, 2CK diodes can be used for D1 and D2.
6) For touching switch circuit, a 2AK diode may get a better result.

7. Conclusion

1) Draw the waveforms you have observed on CRO.
2) Show the pulse width for one-shot, and duty for oscillator to verified your design.
3) For touching switch, describe how the voltage of pin5 has effect on the output.
4) List the capacitor values you have tested, and discuss how to improve testing precision.

Experiment 2 TTL NAND Gate and CMOS Gate Circuits

1. Aim

1) To learn testing methods of TTL NAND gates' key parameters and the transmission characteristics.
2) To understand performance parameters and characteristics of CMOS inverter.
3) Be familiar with connection ways of TTL and CMOS.

2. Experiment Introduction

This experiment provides an introduction to the testing methods of integrated circuit logic gates' static parameters and logic functions, taking currently widely used TTL NAND gates and CMOS inverter circuits as examples.

1) TTL NAND gates key parameters

a) Output HIGH U_{OH}

U_{OH} is the output when one or more than one input of NAND gate is LOW. It must be higher than standard high voltage (2.4V) without load, and will decrease when a sinking current load is connected. The testing circuit is as Figure 2.1.

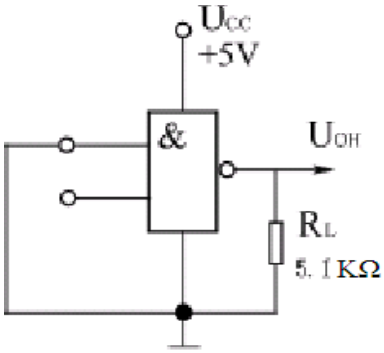

Figure 2.1 Output HIGH Test Circuit

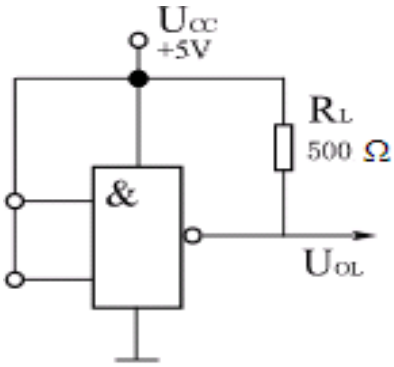

Figure 2.2 Output LOW Test Circuit

b) Output LOW U_{OL}

U_{OL} is the output when all inputs of NAND gate are HIGH. It must be lower than standard low voltage (0.4V) without load, and will increase when a sourcing current load is connected. The testing circuit is as Figure 2.2.

c) Input short circuit current I_{IS}

I_{IS} is the current tested from the input concerned when it is LOW with other inputs open. Normally ***I_{IS}*** <1.6mA, and ***I_{IS}*** is last level's sourcing current when its output is LOW. The test circuit is as Figure 2.3.

d) Fan-out N

N is the number of load gate inputs that a given gate can drive. It can be used to weigh driving load capacity. Test circuit is as Figure 2.4. First when the output is not more than standard low voltage, the maximum permitted load current I_{OL} is tested. Then fan-out can be got by calculation: $N = I_{OL} / I_{IS}$.

Normally, only those NAND gates with N >8 can be regarded as eligible.

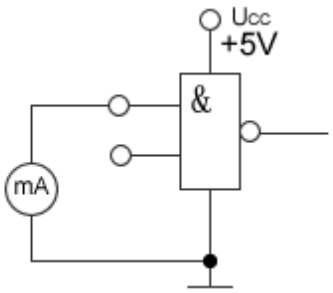

Figure 2.3 Input Short Current Test Circuit

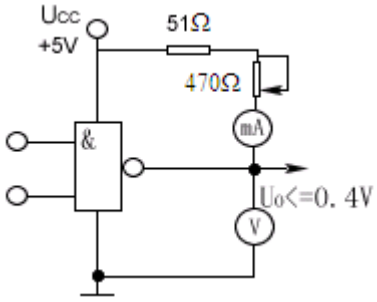

Figure 2.4 Fan-out Test Circuit

e) TTL NAND gates' transmission characteristics

TTL NAND gates' transmission characteristic is as Figure 2.5. Based on the transmission characteristics, we can check if TTL NAND gate is working correctly. In the meantime, its key static parameters like U_{OH}, U_{OL}, U_{ON}, U_{OFF} and △1、△0 can be read out. On-gate voltage U_{ON} is the permitted minimum input high voltage when the output is standard low voltage (0.4V). Off- gate voltage U_{OFF} is the permitted maximum input low voltage when the output is standard high voltage (2.4V). Figure 2.6 gives the test circuit for TTL NAND gates' transmission characteristic.

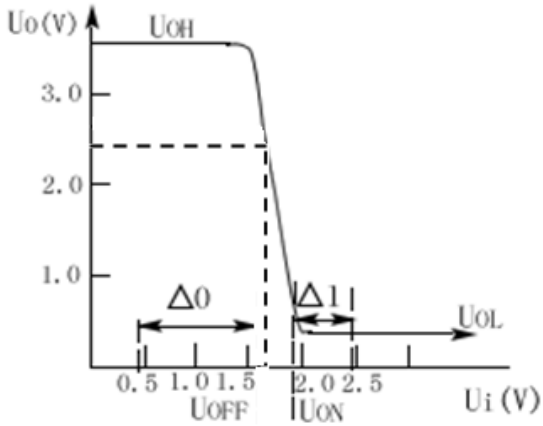

Figure 2.5 TTL NAND Gate Transmission Characteristic

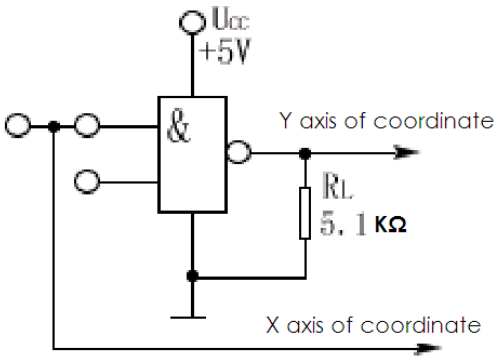

Figure 2.6 Test Circuit for TTL NAND Gate Transmission Characteristic

2) CMOS logic gates circuits

Complementary MOS (CMOS) logic uses the MOSFET in complementary pairs as its basic element. A complementary pair uses both *p*-channel and *n*-channel enhancement MOSFETs, as shown in the inverter circuit in Figure 2.7. The two gates are connected together as circuit input, and the two drains are connected together as output.

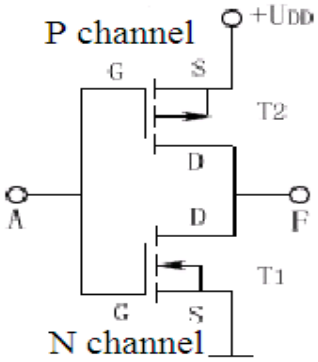

Figure 2.7 CMOS Inverter Circuit

A. Characteristics of CMOS Integrated Circuits
   a) Low static power consumption around 0.01～0.1 μW, but 10mW for 74 series TTL.
   b) Fluctuation of power supply around 3～15V is allowed.
   c) Strong resistance to interference ability about 1.5～6V, and will increase with the source voltage increasing.
   d) Big fan-out to 50.
   e) Good temperature stability.

B. Precautions for Handing CMOS
   a) Do not insert CMOS devices (or any other ICs) into sockets or PC boards with the power on.
   b) All unused inputs should be connected to the supply voltage (NAND) or ground (NOR). If left open, an input can acquire electrostatic charge and "float" to unpredicted levels.
   c) After assembly on PC boards, protection should be provided by storing or shipping boards with their connectors in conductive foam. The CMOS input and output pins may also be protected with large-value resistors connected to ground.
   d) For CMOS supply, U_{DD} connects to positive, U_{SS} connecting to negative or ground. Exchanging way is absolutely prohibited.
   e) Input voltage for CMOS should be within $U_{SS} \leqslant U_I \leqslant U_{DD}$.
   f) Do not apply signal voltage when power is off.

3) TTL and CMOS gate circuits co-connections

When digital components of different electrical standard are used in one system, make sure the voltages and currents of co-connection input/output pins match appropriately. Table 2.1 lists the key parameters of TTL and CMOS under power source U_{CC} =+5V.

Table2.1 TTL and CMOS Gate Circuits Key Parameters

Parameter	74HCMOS	74TTL	74LSTTL
***U**IH*,min	3.5V	2.0V	2.0V
***U**IL*,max	1V	0.8V	0.8V
***U**OH*,min	4.9V	2.4V	2.7V
***U**OL*,max	0.1V	0.4V	0.4V
***I**IH*,max	1.0μA	40μA	20μA
***I**IL*,max	-1.0μA	-1.6mA	-400μA
***I**OH*,max	-4.0mA	-400μA	-400μA
***I**OL*,max	4.0mA	16mA	8mA

From above table we can see that when +5V power is adopted by both CMOS and TTL, their voltages are basically compatible. If CMOS drives TTL, CMOS's ***U***OH,min=4.9V, and TTL's ***U***IH,min=2.0V, CMOS's ***U***OL,max=0.1V, and TTL's ***U***IL,max=0.8V, which can satisfy cooperation requirements, and they can connect directly. If TTL drives CMOS, TTL's ***U***OL,max=0.4V, and CMOS's ***U***IL,max=1.0V, and cooperation requirements are satisfied. But from high voltage point of view, TTL's ***U***OH,min=2.4V, and CMOS's ***U***IH,max=3.5V. In this situation, TTL can not drive CMOS directly. An up-drawing resistor R can be connected between TTL's output and power source as shown in Figure 2.8. Normally, the value of R is between 3.3KΩ～4.7KΩ.

When TTL drives CMOS, if CMOS's power voltage is higher, the output of TTL can still connect an up-drawing resistor. But integrated totem-pole open gate circuit must be adopted, or voltage-converting circuit is adopted to get voltage match.

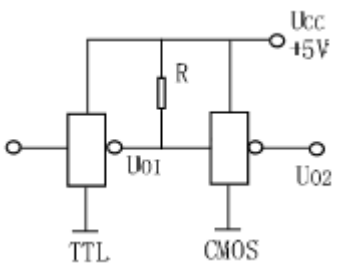

Figure 2.8 Up-Drawing Resistor

3. Pre Laboratory

1) Review the work principle, truth table and every key parameters of TTL NAND gate.
2) Review the work principle of CMOS inverter, and know how to use it.
3) Be familiar with pin diagrams of integrated circuit 74LS00, CD4011 and CD4007. Know internal circuit of CD4007.
4) Familiarize yourself with digital training case.

4. Experiment Requirements

1) Measure the key parameters of TTL NAND gate (74LS00).
   a) Output HIGH U_{OH} with and without load.
   b) Output LOW U_{OL} with and without load.
   c) Input short circuit current I_S.
   d) Fan-out **N**.

2) Test and draw the voltage transmission characteristic of TTL NAND gate (74LS00).

Input 400Hz sawtooth wave. Observe output on CRO and draw transmission wave on square paper indicating U_{OH}, U_{OL}, U_{ON}, U_{OF}, calculating △1 and △0.

3) TTL and CMOS connecting

a) Build circuit according to Figure 2.9. Input 100KHz square wave. Observe U_{O1} and U_{O2} on CRO separately, and test going up time.

b) Build circuit according to Figure 2.10. Input 100KHz square wave. Observe U_{O1} and U_{O2} on CRO separately, and test going up time.

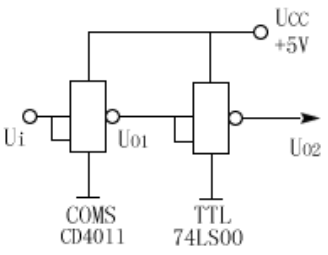

Figure2.9 CMOS Drives TTL

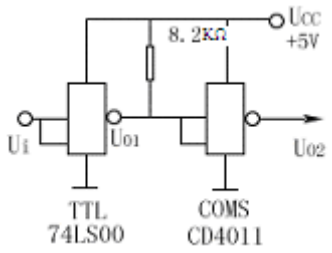

Figure 2.10 TTL Drives CMOS

4) CD 4007 Experiment

The internal circuit of CD4007 is shown in Figure 2.11.

a) By using CD4007 to get NAND gate:

$$Y = \overline{ADI}$$

b) By using CD4007 to get NOR gate:

$$Y = \overline{A + D + I}$$

Draw connection wires and fill results in truth tables, measuring HIGH and LOW voltage values.

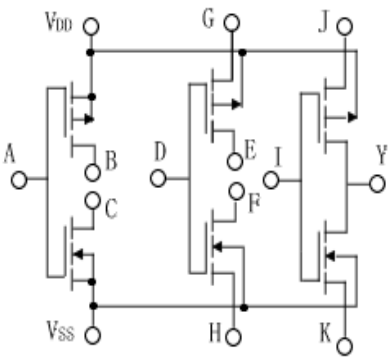

Figure 2.11 CD 4007 Internal Circuit

5. ICs supplied

74LS00 1piece

CD4011 1piece

CD4007 1piece

6. Summary Requirements

1) Record NAND gate key parameters measured, comparing them with standard values.

2) Draw the voltage transmission characteristic of TTL NAND gate, indicating U_{OH}, U_{OL}, U_{ON}, U_{OFF}, calculating △1 and △0.

3) Draw Uo1 and Uo2 waves in TTL and CMOS co-connecting circuits and measure going up time. Compare speeds of TTL and CMOS.

4) List the truth tables of logic relations realized by CD4007.

7. Precautions

1) Be clear of all pin-out diagrams.

2) All unused inputs of TTL NAND gate can be connected to HIGH, and output can't

be used in parallel or connected to power supply or ground.

3) Be cautious of CMOS, and all unused pins must be connected to HIGH (NAND gate) or LOW(NOR gate).
4) Don’t insert or pull out CMOS into sockets or PC board with the power on. The signal must be given after power is switched on .

Experiment 3 Combinational Logic and

Sequential Logic Circuit Design

1. Aim

1) To familiarize and check several types of non-memory logic components.
2) To master and test the logic functions of D and JK flip-flops.
3) To learn to design and debug combinational logic circuit.
4) To realize the way to design a Mod-16 counter by flip-flops.
5) To study basic debugging ways for sequential logic circuit.

2. Experiment Explanation

1) Combinational Logic Circuit

Normally combinational logic circuit is made up of several basic logic units. The output signal is only decided by input signal of the time, but has nothing to do with primary circuit state. Gate circuit is the most basic none-memory logic unit.

In circuit design, based on main characteristics of circuit, it is best to select available medium or large scale integration chips with standard functions. And small scale chips like gate circuits can be acted as interface between medium and large scale chips to assort with their work. The circuits designed in this way can work well and reliably, and easy to realize.

(1) Design Example

Now take an example to show how to design a combinational logic circuit. Design a logic circuit to control a bulb in a building by 3 switches A, B and C. The rules are as following:

i. Logic “1” stands for switch up. Logic “0” for switch down;
ii. The bulb will light up when odd switches (1 or 3) up, and the bulb will be off when even switches (0 or 2) up.

If we design the circuit by medium-scale integrated NAND gates, the design steps are as following:

i. Use Karnaugh map to show above requirements

A \ BC	00	01	11	10
0	0	1	0	1
1	1	0	1	0

ii. Write the simplest Boolean output expression

$$F = A\overline{B}\overline{C} + \overline{A}\overline{B}C + ABC + \overline{A}B\overline{C}$$

$$= \overline{\overline{A\overline{B}\overline{C}} \bullet \overline{\overline{A}\overline{B}C} \bullet \overline{ABC} \bullet \overline{\overline{A}B\overline{C}}}$$

iii. Draw circuit diagram realized by hardware, as Figure 3.1.

In addition, considering the logic expression:

$$F = A\overline{B}\overline{C} + \overline{A}\overline{B}C + ABC + \overline{A}B\overline{C}$$

$$= (A\overline{B} + \overline{A}B)\overline{C} + (\overline{A}\overline{B} + AB) \bullet C$$

$$= (A\overline{B} + \overline{A}B) \bullet \overline{C} + \overline{(A\overline{B} + \overline{A}B)} \bullet C$$

$$= (A \oplus B) \oplus C$$

Clearly it is much easier to realize above design by medium-scale circuit 74LS86, as shown in Figure 3.2. There are four XOR gates inside 74LS86, in which any two of them can be used.

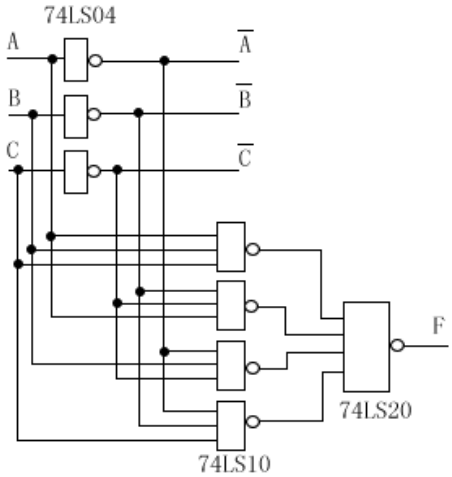

Figure 3.1 Design by NAND Gates Circuit

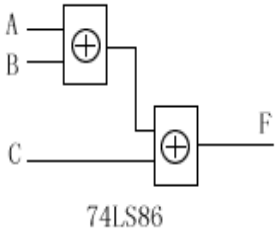

Figure 3.2 Design by XOR Gates

(2) Commonly Used Medium-scale Integrated Combinational Circuits

i. 4-bit Parallel Full Adder 74LS283

The full-adder accepts two inputs bits and an input carry and generates a sum output and an output carry. Four full-adders are connected to form 4-bit parallel binary adders. Table 3-1 is the truth table for a 4-bit adder. The subscript *n* represents the adder bits and can be 1, 2, 3, or 4 for the 4-bit adder. A_n is addend, and B_n is augend, $\sum_n$ represents the sum of each bit. C_{n-1} is the carry from the previous adder. Carries C_1, C_2 and C_3 are generated internally. C_0 is an external carry input and C_4 is an output. The pin-out diagram of 74LS283 can be seen in appendix. It can realize four-bit binary code's full adding.

In addition, there are 1-bit full adder 74LS183 and 2-bit full adder 74LS82, which can be selected according to requirements.

Table 3-1 Truth Table for Each State of a 4-bit Parallel Adder

C_{n-1}	A_n	B_n	$\sum_n$	C_n
0	0	0	0	0
0	0	1	1	0
0	1	0	1	0
0	1	1	0	1
1	0	0	1	0
1	0	1	0	1
1	1	0	0	1
1	1	1	1	1

ii. 74LS153 1-of-4 Data Selector/Multiplexer

A multiplexer (MUX) is a device that allows digital information from several sources to be routed onto a single line for transmission over that line to a common destination. It also has data-select inputs, which permit digital data on any one of the inputs to be switched to the output line.

74LS153 consists of two separate 4-input multiplexers. Each of the two multiplexers has four data inputs, one data output sharing a common data-select line and a common Enable control. Two bits are required to select any one of the four data inputs. A LOW on the $\overline{Enable}$ input allows the selected input data to pass through to the output. The truth table is shown in table 3-2, and the logic symbol is shown in Figure3.3.

Table 3-2 74LS153 Truth Table

Data select		Enable control	Data inputs				Data output
B	A	G	C3	C2	C1	C0	Y
0	0	0	X	X	X	0	0
0	0		X	X	X	1	1
0	1	0	X	X	0	X	0
0	1		X	X	1	X	1
1	0	0	X	0	X	X	0
1	0		X	1	X	X	1
1	1	0	0	X	X	X	0
1	1		1	X	X	X	1
X	X	1	X	X	X	X	0
Note: X stands for 0 or 1.							

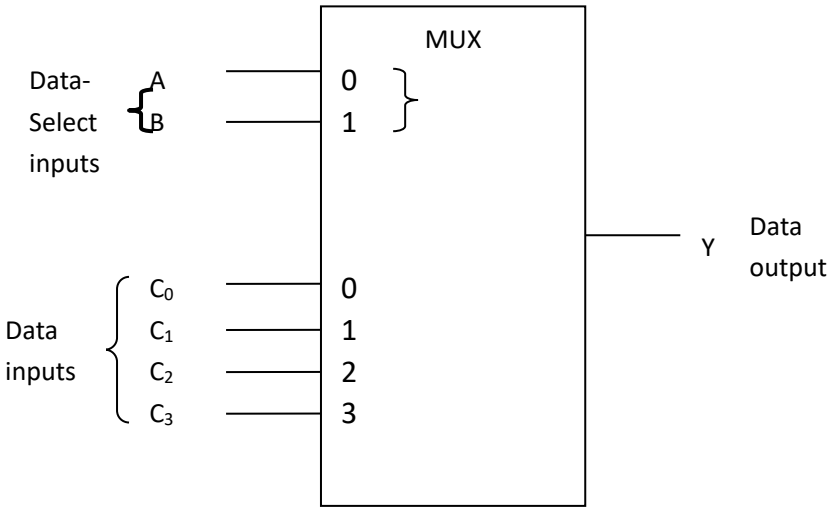

Figure 3.3 Logic Symbol for a 1-of-4 Data Selector/Multiplexer

There is another chip 74LS151. It is a 1-of 8 data selector.

It is very convenient to realize some logic functions by data selectors.

For example, design a combinational logic circuit by data selector requiring that the output is 1 when a 3-bit binary data $D_2D_1D_0$ is a prime number, otherwise the output is 0.

It is known that for decimal number from 0 to 7, there are five prime numbers 1, 2, 3, 5, and 7. Now all possible situations are listed in table 3-3.

Table 3-3 Prime Number Indication Truth Table

Decimal	D_2	D_1	D_0	Prime Number	Output
0	0	0	0	0	D_0
1	0	0	1	1	
2	0	1	0	1	1
3	0	1	1	1	
4	1	0	0	0	D_0
5	1	0	1	1	
6	1	1	0	0	D_0
7	1	1	1	1	

It is seen from table 3-2 that except both outputs must be prime numbers shown by 1 when D_2D_1=01, all other six outputs are completely decided by D_0. So 1-of-4 data selector can be used to satisfy above requirements by D_2D_1 as data-select inputs to B and A, and D_0 and 1 to data inputs separately. The logic circuit is shown in Figure 3.4.

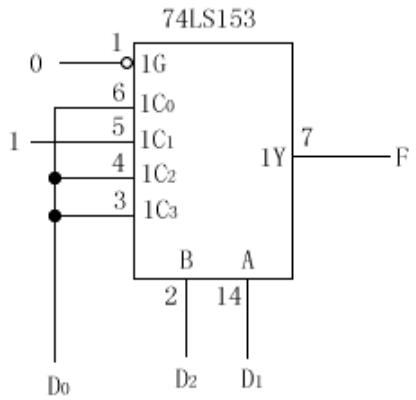

Figure 3.4 Prime Number Indication 74LS153 Logic Circuit Diagram

iii. 74LS138 3-line-to 8-line Decoder

A decoder is a digital circuit that detects the presence of a specified combination of bits (code) on its inputs and indicates the presence of that code by a specified output level. In its general form, a decoder has *n* input lines to handle *n* bits and from one to 2^n output lines to indicate the presence of one or more *n*-bit combinations.

74LS138 is a 3-line-to-8-line decoder because there are three inputs and eight outputs or 1-of-8 decoder because for any given code on the inputs, one of the eight outputs is activated. There are 3 enable controls provided on this device G1, $\overline{G2A}$ and $\overline{G2B}$. When G1= 1, $\overline{G2A}+\overline{G2B}=0$, the decoder is in decoding state. Based on decoder selected inputs, the corresponding decoder output will be LOW. Otherwise, the decoder outputs will be HIGH regardless of the states of the three input variables. For example, when CBA=001, then Y_1=0, and other outputs are all HIGH (no output). $\overline{G2A}$ and $\overline{G2B}$ are also called chip select inputs, which can be used to connect several chips in order to expand decoder's function.

A list of eight binary codes and their corresponding decoding functions is given in Table 3-4.

3-line-to-8-line decoder is widely used, and the most basic application is to decode the exclusive address from inputted binary code. For example, when CBA=110, the output line with LOW is Y_6, which is called binary decoding. Secondly, a signal can be transmitted from different path under the control of decoding selection. For example, when CBA=000, the signal is transmitted by the output Y_0. Thirdly, it can realize Boolean algebra. Because 3-line-to-8-line decoder can produce all minimum expressions of input decoding selections, and any Boolean algebra can be expressed in format of the sum of all minimum expressions, any Boolean algebra can be realized by 3-line-to-8-line decoder and NAND gates.

Table 3-4 Functions of 3-line-to 8-line Decoder 74LS138

Data Inputs					Data Outputs							
Enable Controls		Decoding Selection			Y0	Y1	Y2	Y3	Y4	Y5	Y6	Y7
G1	G2A+G2B	C	B	A								
0	X	X	X	X	1	1	1	1	1	1	1	1
X	1	X	X	X	1	1	1	1	1	1	1	1
1	0	0	0	0	0	1	1	1	1	1	1	1
1	0	0	0	1	1	0	1	1	1	1	1	1
1	0	0	1	0	1	1	0	1	1	1	1	1
1	0	0	1	1	1	1	1	0	1	1	1	1
1	0	1	0	0	1	1	1	1	0	1	1	1
1	0	1	0	1	1	1	1	1	1	0	1	1
1	0	1	1	0	1	1	1	1	1	1	0	1
1	0	1	1	1	1	1	1	1	1	1	1	0

For example, in above logic circuit to control a bulb in a building by 3 switches A, B and C, logic expression

$$F = A\overline{B}\overline{C} + \overline{A}\overline{B}C + ABC + \overline{A}\overline{B}\overline{C}$$

It is very easy to realize this expression by 74LS138 and one 4-input NAND gate (for example 1/2 74LS20). See Figure 3.5.

In commonly used medium-scale integration chips, there are comparators, encoders, etc. They all bring convenience to combinational logic circuit design.

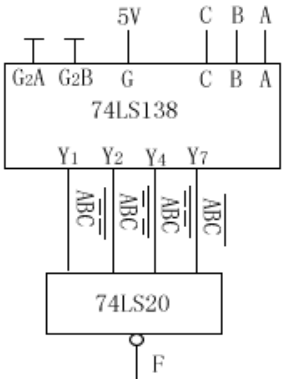

Figure 3.5 Bulb Controlling Circuit

2) Flip-Flops and Simple Sequential Logic Circuit

A sequential logic circuit has memory function. Its output signal is decided not only by input signal of the time, but also the circuit's pre-state. Flip-flops are the most basic logic units composing sequential logic circuit.

i. Flip-flops

(a) D Flip-flops

Figure 3.6 and Figure 3.7 are logic symbol and state conversion diagram of D flip-flops. Table 3-5 and table 3-6 are the characteristic and driving tables.

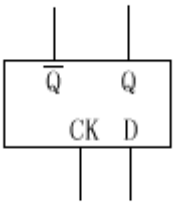

Figure 3.6 D Flip-flop Logic Symbol

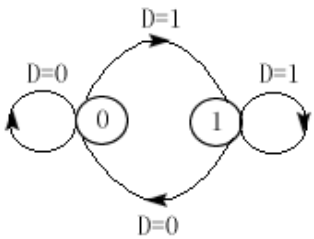

Figure 3.7 D Flip-flop State Conversion Diagram

Table 3-5 74LS74 Characteristic Table

D	Qn+1
0	0
1	1

Table 3-6 74LS74 Driving Table

Qn →	Qn+1	D
0	0	0
0	1	1
1	0	0
1	1	1

Its characteristic equation: Q_{n+1}= D

74LS74 contains two identical D flip-flops that are independent of each other except for sharing V_{cc} and ground. See appendix for pin-out diagram. Its functional characteristic is shown in table 3-7. Therein, PR for SET, CR for RESET, and CK for CLOCK input. The flip-flops are positive edge-triggered and have active-LOW asynchronous SET and RESET inputs.

Table 3-7 74LS74 Functional Characteristic

Inputs				Outputs	
PR	CR	CK	D	Q_{n+1}	$\overline{Q}_{n+1}$
0	1	×	×	1	0
1	0	×	×	0	1
0	0	×	×	Unstable*	
1	1	↑	1	1	0
1	1	↑	0	0	1
1	1	0	×	Qn	$\overline{Q}_n$

*Notice: This is forbidden because the logic relation is broken.

(b) J-K flip-flops

Figure 3.8 and Figure 3.9 are logic symbol and state conversion diagram of J-K flip-flops. Table 3-7 and table 3-8 are the characteristic and driving tables.

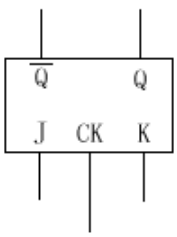

Figure 3.8 J-K Flip-flop Logic Symbol

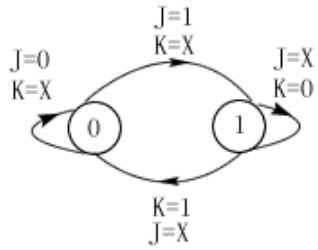

Figure 3.9 J-K Flip-flop State Conversion Diagram

Its characteristic equation: Q_{n+1}= $J\overline{Q}_n + \overline{K}Q_n$

Table 3-8 J-K Flip-flop Characteristic Table

J	K	Qn	Qn+1
0	0	0	0
0	1	0	0
1	0	0	1
1	1	0	1
0	0	1	1
0	1	1	0
1	0	1	1
1	1	1	0

Table 3-9 J-K Flip-flop Driving Table

$Q_n \rightarrow Q_{n+1}$		J	K
0	0	0	×
0	1	1	×
1	0	×	1
1	1	×	0

CD4027 used in this experiment contains two identical J-K flip-flops that are independent of each other except for sharing V_{DD} and ground. See appendix for pin-out diagram. Its functional characteristic is shown in table 3-10. Therein, SD for SET, RD for RESET, and CP for CLOCK input. V_{DD} is power terminal, and V_{SS} is ground terminal. The flip-flops are positive edge-triggered and have active-HIGH asynchronous SET and RESET inputs.

Table 3-10 CD4027 Functional Characteristic

Inputs					Outputs	
SD	RD	CP	J	K	Q_{n+1}	$\overline{Q}_{n+1}$
0	1	×	×	×	0	1
1	0	×	×	×	1	0
1	1	×	×	×	Unstable*	
0	0	↑	0	0	Q_n	$\overline{Q}_n$
0	0	↑	0	1	0	1
0	0	↑	1	0	1	0
0	0	↑	1	1	$\overline{Q}_n$	Q_n
0	0	↓	×	×	Q_n	$\overline{Q}_n$

(c) Preparation time and holding time

In order for a flip flop to convert from a state to an expected state under some inputs, input signal must keep stable for some time before and after the edge of COLOK pulse comes. For example, 74LS74 is positive edge trigged, so the input must keep stable before the CLOCK comes. This period of time is called preparation time. After the CLOCK comes, input must still keep stable, and this period of time is called holding time. For 74LS74, the sum of these two periods of time is about 25ns. If input signal changes between these periods, the output will be abnormal.

ii. Frequency Dividers

When the inputs of J-K flip-flop J=K=1, the frequency of the output Q is one-half the frequency of input CLOCK, see Figure 3.10. The flip-flop is negative edge-trigged in the figure. If *n* J-K flip-flops are set to toggle by the clock tying to the Q output of the previous flip-flop, the last flip-flop will be 2^n frequency of input clock. Figure 3.11 show divide-by-8 frequency circuit and its timing diagrams. We can see that the circuit state $Q_2Q_1Q_0$ will change from 000 through to 111 successively. This is also called mod 2^3 counter.

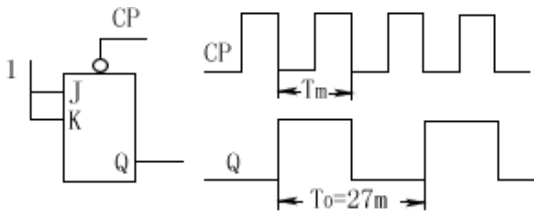

Figure 3.10 Frequency Divider

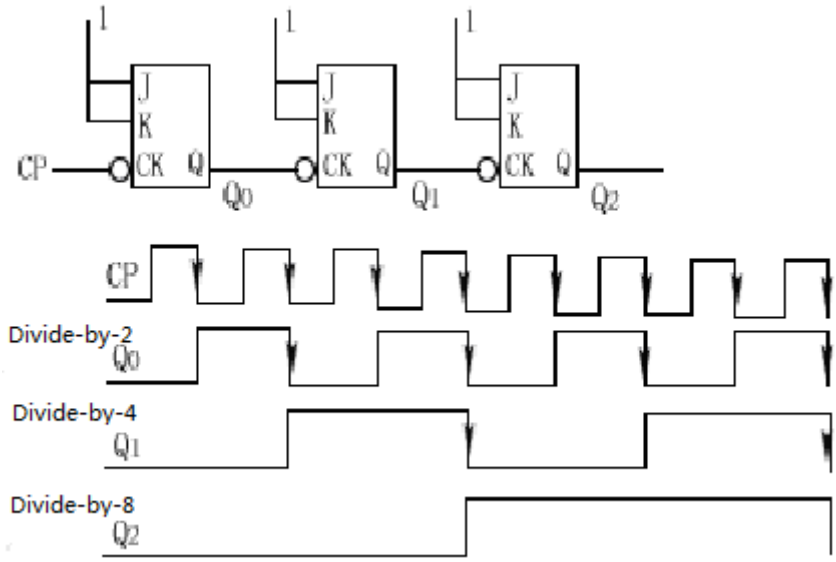

Figure3.11 Asynchronous Mod 8 Counter

This kind of counter is asynchronous because the external CLOCK is only tied to the first flip-flop while the clock input of other flip-flops from the second one is the Q output of previous one. Actually flip-flops states conversion needs some delay time t_p (about scores of nanoseconds). So the output of the second flip-flop will produce propagation delay, and so on for the following flip-flops. Competition-risk can occur due to the different delay times of the outputs of all flip-flops, which can be shown in table 3-11.

Table 3-11 Competition-Risk Phenomena

Time	Q_1	Q_0
f 0	0	1
		↓ The first grade is triggered by external clock pulse
t_p	0	0
T $2t_p$	↓	The second grade is triggered after Q_0 flip via t_p delay
	1	0

Table 3-11 lists Q_1Q_0 converting process from 01 to 10. During the process, there is a state Q_1Q_0 =00 temporarily because of propagation delay, which is undesired and can produce faulty control. Using synchronous trigger to make all flip-flops convert simultaneously can avoid above phenomenon.

Figure 3.12 is a synchronous mod 2^3 counter. All the three flop-flops in the counter are clocked at the same time by a common clock pulse. This kind of driving of J-K flip-flop is more complicated than that of asynchronous counter. The flip-flop's conversion condition for following grade is that the states of all previous grades are 1.

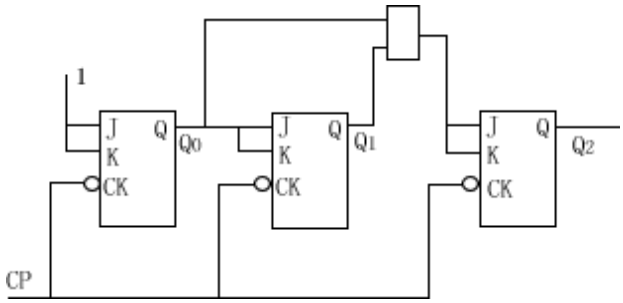

Figure 3.12 Synchronous Modulus 2^3 Counter

3. Preparation Requirements

1) Design a combinational logic circuit, in which there are three inputs and one output. When two or three inputs are HIGH, the output will be HIGH; otherwise the output will be LOW. This is called majority-vote circuit. Requirements are as following:
   (1) Design the circuit by least NAND gates.
   (2) Design by 1-of-4 data selector/multiplexer 74LS153.
   (3) Design by 3-line-to-8-line decoder 74LS138 and one NAND gate.
   (4) All practical wire connecting circuit diagrams must be drawn according to designs indicating pin numbers.
2) Design a combinational logic circuit producing excess-3 code from binary-decimal code by one chip of 4-bit full adder 74LS283. The corresponding codes of these two codes are shown in table 3-11. Requirements are as following:

(1) Design the converting circuit from BCD to excess-3 code.
(2) Design a warning circuit to give out a light signal showing the code is invalid and conversion is unnecessary when the inputs are from 1010 to 1111.
(3) Draw practical wire connecting circuit diagrams indicating pin numbers.

Table 3-11 Codes Corresponding Table

Decimal Number	BCD Code	Excess-3 code
0	0000	0011
1	0001	0100
2	0010	0101
3	0011	0110
4	0100	0111
5	0101	1000
6	0110	1001
7	0111	1010
8	1000	1011
9	1001	1100
10	1010	Invalid codes
11	1011	
12	1100	
13	1101	
14	1110	
15	1111	

3) Design a 4-bit binary (Mod-16) synchronous up counter by 2pcs of CD4027 and NAND gates. Draw the logic diagram indicating pin numbers clearly.
4) Design other circuits you are interested in.
5) Study out methods and steps for testing logic functions of flip-flops.

4. Experiment Contents

1) Build the 3-person vote circuit by NAND gates.
2) Test the logic function of 3-line-to-8-line decoder 74LS138, comparing it with its truth table. Build the 3-person voting circuit by 74LS138, and check if it works correctly.
3) Test the logic function of 1-of-4 data selector 74LS153, comparing it with its truth table. Build the 3-person voting circuit by 74LS153.
4) Test the logic function of 74LS283. Build BCD to excess-3 code conversion circuit and the warning circuit.
5) Test the logic functions of 74LS74 and CD4027, noting the SET and RESET functions, observing when it is triggered (positive or negative edge), and compare it with its truth table. List testing results.
6) Build the 4-bit binary (Mod-16) synchronous up counter with logic switch as inputs and LEDs as outputs, checking if it works correctly.
7) On CRO, observe each output of flip-flops of the counter with sequent CLOCK on experiment trainer kits as CLOCK input, and draw the timing diagrams on square paper.
8) Selection: build other logic circuits you are interested in. Show them to your teacher when they work correctly.

5. IC's Supplied

74LS00	1 piece
74LS20	1 piece
74LS138	1 piece
74LS153	1 piece
74LS283	1 piece
CD4027	2 pieces
74LS74	1 piece

6. Conclusion

1) Write down testing results of all chips by listing their function tables.
2) To show if your designs of vote circuit satisfy requirements.
3) To show if your BCD to excess-3 code circuit works correctly.
4) Draw the timing diagrams of the counter, explaining if the circuit is correct.
5) If you were successful during experiment, write down what you have learned from it. If you met some difficulty, write down your experience.

7. Precautions

1) Make the connections according to the IC pin-out diagram. Switch off power while connecting or disconnecting leads.
2) The connections should be tight.
3) The Vcc and ground should be applied carefully at the specified pin only.
4) Check if inputs and outputs are correct based on logic when troubleshooting.

Experiment 4 Simple Digital Cymometer

1. Purpose

1) Know digital testing principle of signal frequency and period, and know the basic constitution and work principle of digital cymometers.
2) Learn and master the ways to get pulse waveform generators by active crystal oscillator, passive crystal oscillator, resistors, capacitors and inverters.
3) Study to use MSI of counters and frequency demultiplier.
4) Learn to assemble a simple digital cymometer, and study commonly used testing methods.

2. Experiment Explanation

1) Principle of digital testing frequency

Figure 4.1 shows the principle block diagram of a simple digital cymometer. It comprises following four basic parts:

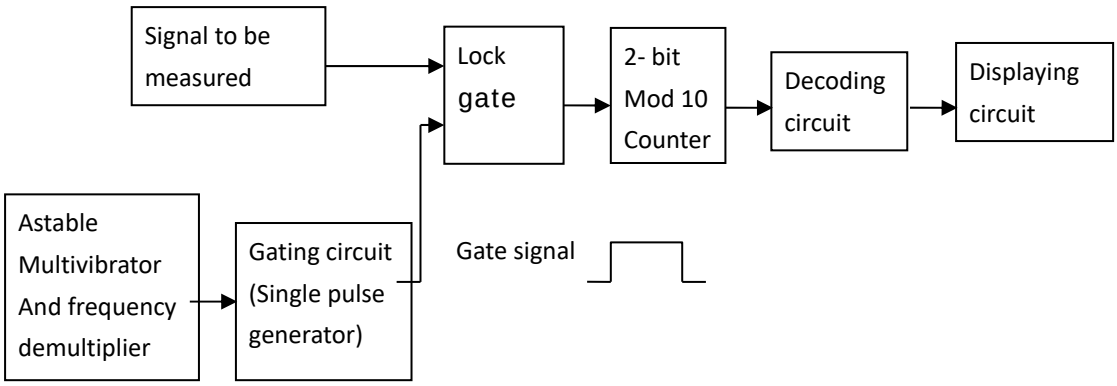

Figure 4.1 Principle Block Diagram of a Digital Cymometer

a) Lock gate

Lock gate consists of gate circuits with the pulses to be countered as one input and gate signal as another input, and the gate signal controls it to open or close.

b) Astable multivibrator

Normally, crystal oscillator and frequency demultiplier can be used to get frequency known and steady oscillation whilst the latter dividing the signal frequency to change the width of gate signal. Here a ring oscillator with RC circuit is used.

c) Gating control circuit

It is used to change the periodic signal from frequency demultiplier into single pulse signal called gate signal.

d) Counter and displaying circuit

It counts the pulses from lock gate, and then display in decimal form via decoding.

Frequency defines as the cycle number of a periodic signal in 1 second. If the circulation number is N in 1 second, the frequency f = N.

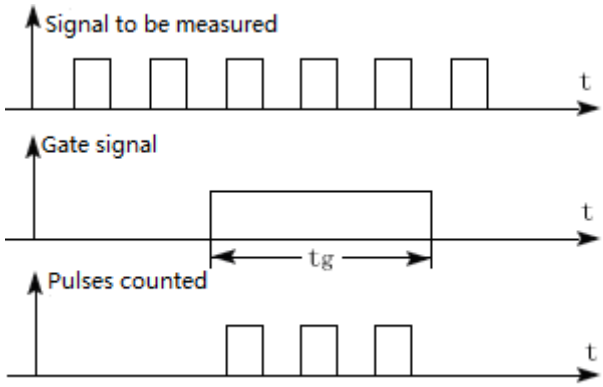

Figure 4.2 Sketch Map of Measuring Frequency Principle

Figure 4.2 illustrates the principle of measuring frequency. Only when gate signal is HIGH can the measured signal passes lock gate and count by the counter. When gate signal is LOW, the lock gate closes and counting stops. If time width of gate signal is known as t_g, the frequency to be measured is

$$f = \frac{N}{t_g}$$

Therein, N is the number counted by the counter.

In order to improve measuring accuracy, it is required that the number of counted pulses is enough. If the frequency of measured signal is low, and the width of gate signal t_g is not wide enough, a error will be big. In this situation, the signal period can be measured.

2) Ring astable multivibrator (oscillator) with RC circuit

BY utilizing transmission time of gate circuits, odd NAND gates each connecting together from the beginning to the end constitute an oscillator, commonly called ring astable multivibrator. Due to the transmission time of gate circuits being several scores of nanoseconds ,the oscillation frequency is very high, and can not be adjusted. If RC delay circuit is added into the ring circuits, delay time can increase, and oscillation frequency can be changed by changing TC parameter, which is ring asable multivibrator with RC circuit shown in Figure 4.3. The inputs and outputs voltage waves are shown in Figure 4.4.

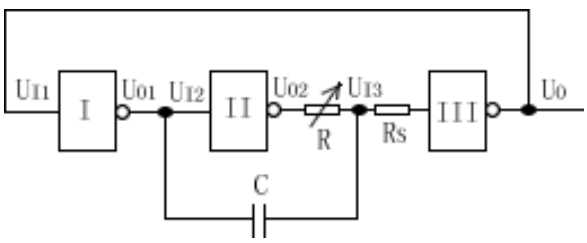

Figure 4.3 Ring Astable Multivibrator

It is obvious that U_O, U_{I1} and U_{O1}, U_{I2} are NOT logic, so is U_{I2} and U_{O2}. The voltage of capacitor can not jump due to the existence of RC, so U_{I3} jumps following U_{O2}. With capacitor charging and discharging, when U_{I3} reaches threshold voltage U_T, NOT gate III will turn over.

The period of the circuit is $T \approx$ 2.2RC. For TTL NAND gates, the value of R should be no more than 2K Ω. Normally RS is 100 Ω around.

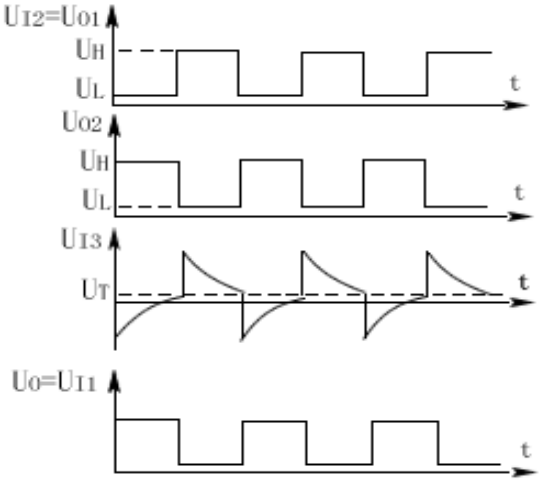

Figure 4.4 Ring Oscillator Waves

3) Singal Pulse Generator

In order to get gate signal of single pulse, single pulse generator whose input is periodic pulses is utilized. K is a control switch. A single pulse with a fixed width will give out with each push. The pulse width has nothing to do with push time but decided by the period of input pulse. Figure 4.5 are single pulse generator circuit and waves.

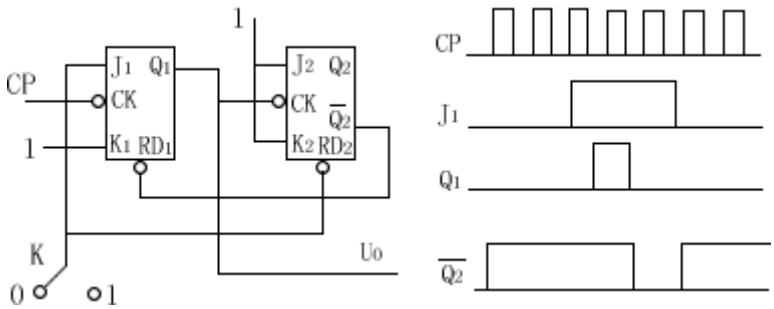

Figure 4.5 Single Pulse Generator Circuit and Waves

The work procedure is as following: switch K is at terminal "0" normally. When power on, Q_2=0, $\overline{Q_2}=1$ due to the RESET pin of the second flip-flop R_{D2}=0. The first flip-flop J_1=0, K_1=1, then Q_1=0. When switch K is pressed to terminal "1", then J_1=K_1=1 and R_{D1}=1. Under the motivation of pulse CP, the first flip-flop will be in toggle mode which makes Q_1 change to "1" state from "0" state, and change back to state "0" from state "1". The falling edge of Q_1 leads the second flip-flop turnover since the conditions have been ready: R_{D2}=1 , J_2=K_2=1. Q_2 changes to state "1" from state"0", $\overline{Q_2}$ changes to state "0" from state"1". Because $\overline{Q_2}$ works at terminal R_{D1} of the first flip-flop, R_{D1}=0 which RESET the first flip-flop to "0". A you can see from Figure 4.5, when switch K is pressed (J_1=1), the output Q_1 of the first flip-flop is a single pulse whose width is the period of CLOCK pulse CP.

Chip 74LS73 used in the experiment is double J-K flip-flops, which pin out diagrams can be found in appendix. Terminal *CLK* is clock pulse input with negative edge-triggered, and *CLR* is RESET terminal with LOW active. The function is shown in table 4-1.

Table 4-1 74LS73 Functions

Inputs				Outputs	
CLR	CLK	J	K	Q_{n+1}	$\overline{Q}_{n+1}$
0	×	×	×	0	1
1	↓	0	0	Q_n	$\overline{Q}_n$
1	↓	1	0	1	0
1	↓	0	1	0	1
1	↓	1	1	$\overline{Q}_n$	Q_n
1	1	×	×	Q_n	$\overline{Q}_n$

4) Mod-10 Counter 74LS90

74LS90 is a medium size scale integrated asynchronous counter. See appendix for its pin-out diagram, and its function is shown in table 4-2.

Table 4-2 74LS90 Functions

Reset Inputs				Outputs			
$R_0(1)$	$R_0(2)$	$R_9(1)$	$R_9(2)$	Q_D	Q_C	Q_B	Q_A
H	H	L	X	L	L	L	L
H	H	×	L	L	L	L	L
×	×	H	H	H	L	L	H
×	L	×	L	Count			
L	×	L	×	Count			
L	×	×	L	Count			
×	L	L	×	Counti			

Pin A and B are counting pulse input with negative edge-triggered. $R_0(1)$ and $R_0(2)$ are RESET terminals with HIGH active. $R_9(1)$ and $R_9(2)$ are SET 9 terminals with HIGH active. When pin A acts as CLOCK pulse input and Q_A as output, 74LS90 works as a binary counter. When pin B acts as CLOCK pulse and $Q_DQ_CQ_B$ as outputs, 74LS90 can realize modulus-5 counting. When Q_A is connected to pin B and pin A acts as CLOCK pulse input, 74LS90 can realize BCD counting. When Q_D is connected to pin A and pin B acts as CLOCK pulse input, 74LS90 can realize biquinary counting (5421 code). The truth tables are shown in table 4-3 and table 4-4. By using feedback SET 9, 74LS90 can realize septenary counting. Figure 4.6 shows the sketch map of binary code decimal 8421 wire connection. When the tenth pulse comes after the counter counts 1001, the counter SET 0 immediately, and gives out a carry pulse to upper bit.

Table 4-3 74LS90 BCD Count Sequence

Count	Outputs			
	Q_D	Q_C	Q_B	Q_A
0	L	L	L	L
1	L	L	L	H
2	L	L	H	L
3	L	L	H	H
4	L	H	L	L
5	L	H	L	H
6	L	H	H	L
7	L	H	H	H
8	H	L	L	L
9	H	L	L	H

Table 4-4 74LS90 Bi-quinary Count

Count	Outputs			
	Q_A	Q_D	Q_C	Q_B
0	L	L	L	L
1	L	L	L	H
2	L	L	H	L
3	L	L	H	H
4	L	H	L	L
5	H	L	L	L
6	H	L	L	H
7	H	L	H	L
8	H	L	H	H
9	H	H	L	L

5) Medium Scale Integrated Circuit Frequency Demultiplier (Oscillator)----CD4060

CD4060 (14bits binary frequency demultiplier/oscillator) pin out diagram is shown in Figure 4.7， and its pin functions are as following:

1： 2^{12} dividing frequency output; 2: 2^{13} dividing frequency output;
3： 2^{14} dividing frequency output; 4: 2^{6} dividing frequency output;
5： 2^{5} dividing frequency output; 6: 2^{7} dividing frequency output;
7： 2^{4} dividing frequency output; 8: Vss ground;
9： Signal positive-going output; 10： Signal negative-going output;
11： Signal input; 12： Reset signal input;
13： 2^{9} dividing frequency output; 14： 2^{8} dividing frequency output;
15: 2^{10} dividing frequency output; 16： VDD source；

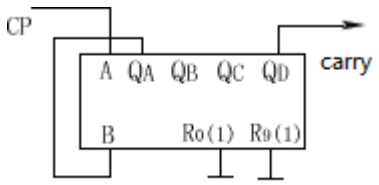

Figure 4.6 8421 Code Wire Connection Sketch Map

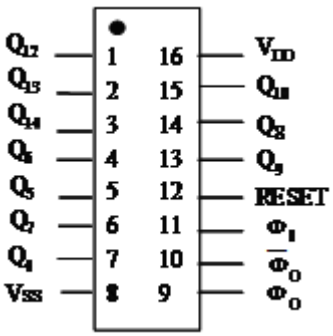

Figure 4.7 CD4060 Pin-out Diagram

CD4060 function is summarized in table 4-5.

Table 4-5 CD4060 Functions

Inputs		**Outputs**		
RESET	ØI	Øo	/Øo	Q divider
H	X	L	L	L
L	CK	Ck	/CK	**Q4～10，12 ～14**

6) **Decoding and Displaying**

The output of the counter is binary code. In order to show as decimal number 0, 1, 2……9, they should be translated and displayed. Commonly, 7-segment fluorescent nixietube or LCD is adopted. Figure 4.8 show the distribution of electrodes. The electrodes are composed of 7 segments a, b, c, d, e, f and g. When positive voltage is given at different segments, corresponding number 0～9 will be displayed. Take Figure 4.8 for example, when segment a, b, c, d, e and f are imposed positive voltage, number 0 will be displayed. When segment a, c, d, f and g are imposed positive voltage, number 5 will be displayed, etc.

Now among 7 segments abcdefg, which segments should be imposed voltage when converting binary code $Q_DQ_CQ_BQ_A$? For example, if $Q_DQ_CQ_BQ_A$ = 0000, then abcdefg=1111110, if $Q_DQ_CQ_BQ_A$ =0101, then abcdefg=1011011, etc. Medium scale integrated circuit encoder 74LS49N and CD4511 can achieve above conversion.

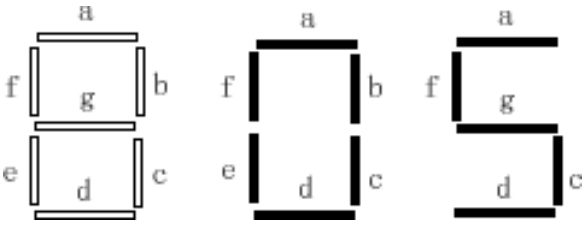

Figure 4-8 Electrodes Distribution of Nixietube

Decoding circuits have already been installed in experiment case. Corresponding decimal number can be displayed provided $Q_DQ_CQ_BQ_A$ are correctly connected to relevant holes of the encoder.

3. Preparation Requirements

1) Design an oscillator by NAND gates, resistors and capacitors with frequency being 100～1000Hz.
2) Select 74LS73 to design a single pulse generator. Input periodic pulses, and output single pulse (terminal RD instead of CLR).
3) Design a 2-bit Mod-10 counter by two pieces of 74LS90. Lock gate can be got by NAND gate. The counter should be RESET at any time.
4) Combine above 1, 2, and 3 to compose a simple digital cymometer. Draw practical circuit indicating chips names used and pin numbers.

4. Experiment Contents

1) Build the astable oscillator by NOT gate, resistors and capacitors. Frequency can be adjusted between 100Hz—1000Hz.
2) Construct the single pulse generator by J-K flip-flops 74LS73.
3) Build 2-bit Mod-10 counter by 74LS90 with RESET function.
4) Get frequency dividing signals 214, 213, 212, 210, 29, 28, 27, 26, 25, 24 and basic positive and negative clock signals from the output of frequency dividing circuit consisting of 4MHz active crystal oscillator and CD4060 frequency demultiplier. Make these output signals as the signals to be measured of your digital cymometer.

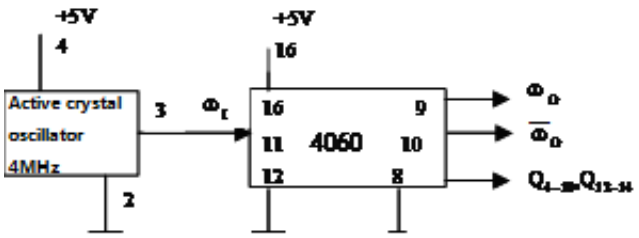

Figure 4-9 Oscillator and Frequency Demultiplier

5) Assemble above four steps and Lock gate together to make a whole digital cymometer. Test the cymometer, comparing the results with actual frequencies (tested by CRO).
6) Make a waveform generator by 11.0592MHz passive crystal oscillator, NOT gate, resistors and capacitors. Obverse signal wave on CRO and draw down.

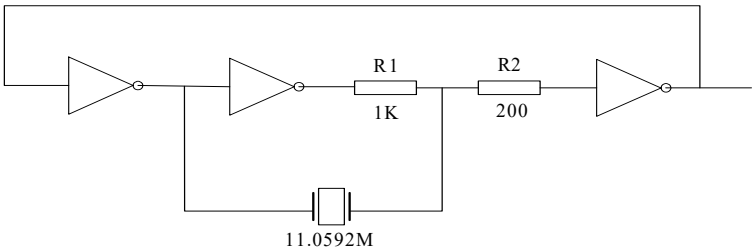

Figure 4-10 Waveform Generator

7) Design and test a 60-frequency-divider circuit.
8) Design oscillators with certain frequency by CD4060, crystal oscillator or resistors and capacitors.

5. IC's Supplied

74LS90	2 pieces
74LS73	1 piece
74LS00	1 piece
74LS04	1 piece
CD4060	1 piece
Potentiometer 2KΩ 1W	1 piece
Resistor 100Ω	1piece
Capacitor 10uF	1 piece
Active crystal oscillator	1 piece
Passive crystal oscillator	1 piece

6. Questions

How to construct a 60-frequency-divider circuit by 74LS90? If you are interested in it, you can build it after finishing all required experiments. If the count pulse is second signal, an electrical stopwatch is achieved.

7. Precautions

1) Do not misconnect power, ground and output terminals of active crystal oscillator
2) For CD4060 frequency demultiplier output signals, there are the characteristics of forward and reverse directions.

3) Be careful of RESET and PRESET 9 when using 74LS90.
4) Active crystal oscillator and passive crystal oscillator pins.

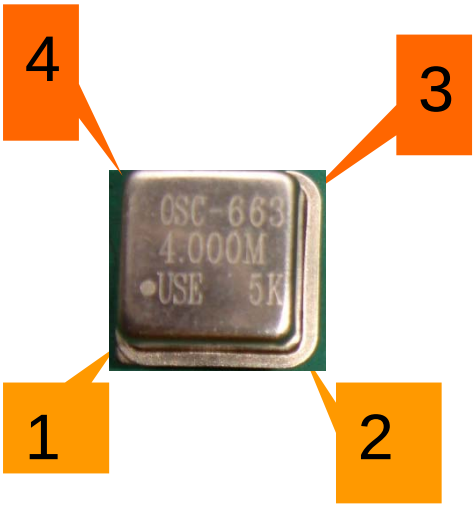

Figure 4-11 Active Crystal Oscillator

1: NC 2: ground 3: output 4: power

Figure 4-22 Passive Crystal Oscillator

8. Conclusions

1) Write down the design process of your simple cymometer and testing results.
2) Assess the precision of your digital cymometer. How to improve to get more precise? Put forward solving scheme.
3) Design and compare several ways of pulse generating circuits.

Experiment 5 Sequential Lock

1. Purpose

1) To familiarize and use shift register 74LS194.
2) To know serial/parallel in, serial/parallel out in digital circuit.
3) Learn to design, assemble and test synchronous timing sequence network by a LOCK system.

2. Experiment Explanation

1) Outline of synchronous timing sequence network design

(1) Logic description

Based on practical situation, confirm state number and transforming conditions. Draw state flow chart and simplify it necessarily.

(2) States naming

Replace the states expressed by none-binary codes with binary codes, and consequently confirm the number of flip-flops needed. If the simplest states number is *N*, the number of flip-flops needed *M* will be $2^M \geq N$ or $M \geq \log_2 N$.

(3) Flip-flop choosing

Usually D or J-K flip-flops are used.

(4) Getting driving equations

According to state tables of chosen flip-flops, list logic equations of each flip-flops control terminals, and simplify them and get the simplest logic expressions.

(5) Circuits construction and static and dynamic testing

Now we will illustrate above design procedures by an example.

Example: Design a “111” sequence picker whose output *Z* will be “1” when input X is “1” with 3 or more than 3 times in succession, otherwise *Z* will be “0”.

(1) Logic description

There are 4 possible situations:

a. Initial state named state A: all inputs are “0”, and then output *Z* is “0”.
b. State B: Only one “1” comes and one “0” follows from input, and then output *Z* is “0”.
c. State C: Two “1” come in succession and one “0” follows, then output *Z* is “0”.
d. State D: Three or more “1” come in succession, then output *Z* is “1”. Once “0” comes, system will return to initial state A.

State flow chart can be drawn based on requirements, shown as figure 5.1. Each letter in the circle stands for a state. Lines and arrows between each state stand for states transition. The numbers beside lines are “inputs/output”

showing state transition conditions and results.

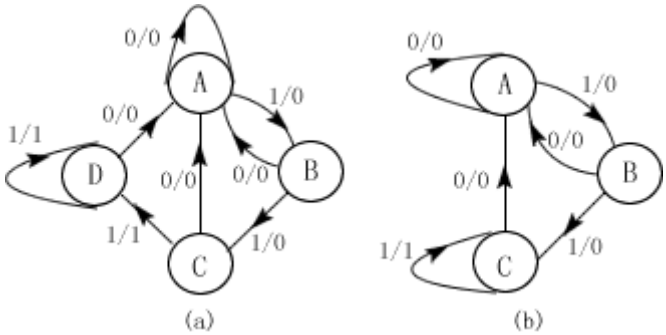

(a) Basic chart (b) Simplified chart

Figure 5.1 State flow chart

From figure 5.1(a), we can see that there are same input/output relations for state C and D, so they are the same and can be simplified as figure 5.1(b).

(2) States naming

Because N=3, 2 flip-flops will be used. See table 5-1 for specific states naming.

(3) Flip-flop choosing

Here, D flip-flops are chosen.

(4) Getting driving equations

Table 5-2 lists states transitions based on states flow chart and function table of D flip-flop. Therein Q_1 and Q_2 are current states of flip-flops; Q_1' and Q_2' are next states, X and Z are input and output respectively. D_1 and D_2 are for next state:

$$D1=f(X, Q_1, Q_2)$$

$$D2=f(X, Q_1, Q_2)$$

These are driving equations.

Table5-1 States naming

State	Q_1	Q_2
A	0	0
B	0	1
C	1	0
None	1	1

Table 5-2 States transition table

X	Q_1	Q_2	Q_1'	Q_2'	D_1	D_2	Z
0	0	0	0	0	0	0	0
1	0	0	0	1	0	1	0
0	0	1	0	0	0	0	0
1	0	1	1	0	1	0	0
0	1	0	0	0	0	0	0
1	1	0	1	0	1	0	1

From table 5-2, we can get:

$$D_1= XQ_2\overline{Q_1} + XQ_1\overline{Q_2}$$

$$D_2= X\overline{Q_1}\overline{Q_2}$$

And

$$Z= XQ_1 \bullet \overline{Q_2}$$

As the state Q_1= Q_2=1 is not used here, above three expressions can be simplified as:

$$D_1 = X(Q_1 + Q_2) = X\overline{\overline{Q_1} \bullet \overline{Q_2}}$$

$$D_2 = X\overline{Q_1}\,\overline{Q_2}$$

$$Z = XQ_1$$

(5) Circuits construction

The logic circuit diagram of this synchronous timing sequence network is shown in figure 5.2, wherein Φ is system CLOCK.

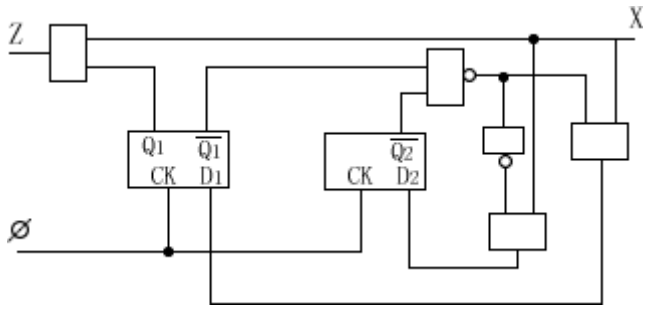

Figure5.2 Logic circuit diagram of synchronous timing sequence network

(6) Static and dynamic testing

Static testing: get *a* single pulse signal as Φ, and change value of X while observing Z. The main purpose is to test and verify the correctness of design.

Dynamic testing: get two pulse signals as Φ and X to satisfy some logic relations. Observe Z on CRO, and change signal frequency to get relation between the circuit and work frequency.

2) Work principle of sequential lock

Figure 5.3 is the principle sketch of sequential lock, which consists of four parts: synchronous timing sequence network, codes setting, comparison, open and alarm.

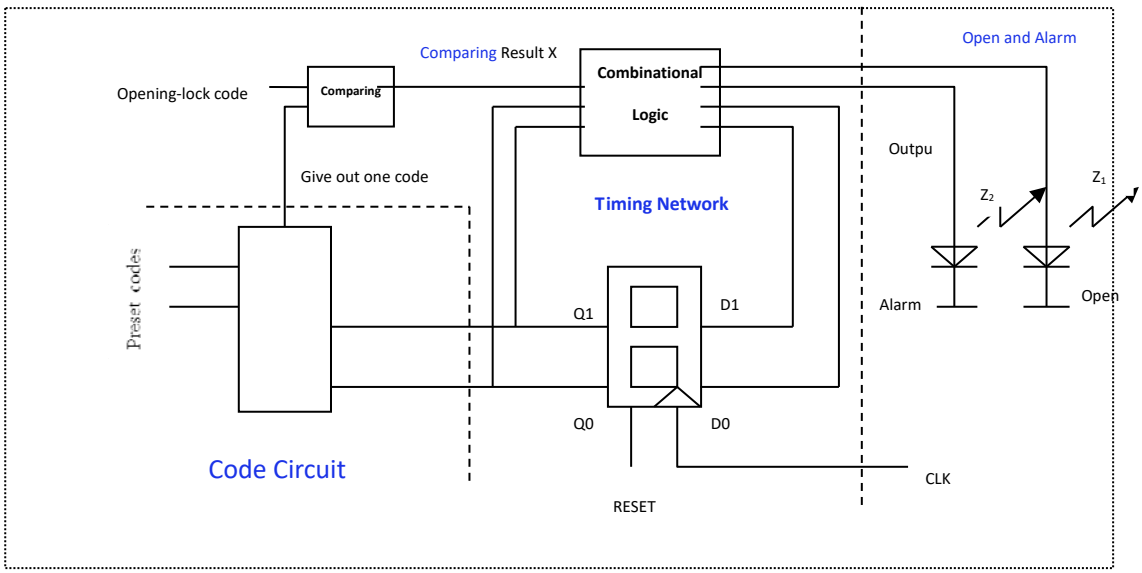

Figure5.3 Sequential lock constitution principle sketch

(1) Code circuit: firstly, lock codes are preset. Via comparison, when opening code and presetting code are identical, the lock will be opened, otherwise the system will give an alarm. Presetting codes can be changed.

(2) Comparing circuit: by CLOCK, opening codes compare with presetting codes one bit by one, and forward the results to the input of timing network. Once the result is not identical, timing network will give a alarm signal. If the result is identical, next bit will go on comparing till the last bit. If all opening codes are identical to presetting codes, timing network will give a signal of opening lock.

(3) Timing network: Its input is the comparison result, and it gives a opening lock signal or a alarm signal by states transmission. When a bit of opening code is identical to the corresponding presetting code, it will transfer to next state, controlling code circuit to output next bit which will compare with opening code again. Only until each bit of opening code is identical to presetting code, can timing network give a signal of opening lock. Once one bit is not identical, it gives an alarm signal immediately.

Now we will illustrate by flow chart and state chart, see figure 5.4 and figure 5.5.

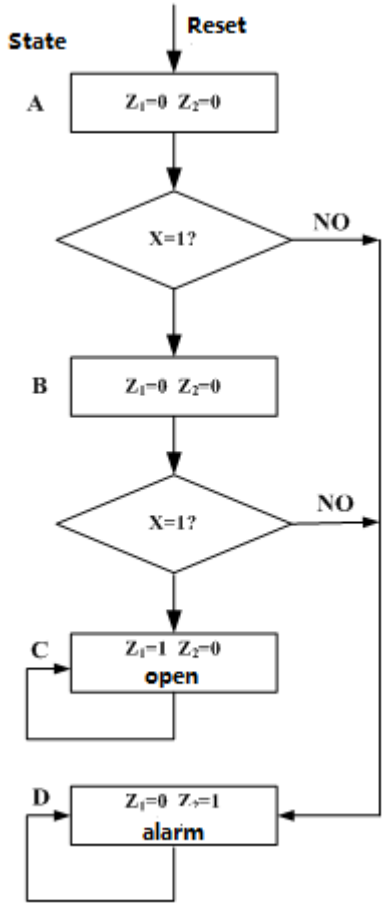

Figure 5.4 Flow chart

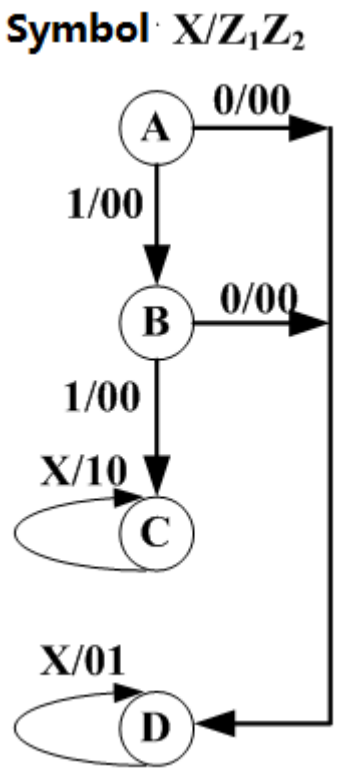

Figure 5.5 State chart

The state chart shows that the initial state is A. When input X is “1”, state transfers to B and C in sequence. Finally output Z_1 is “1”, and lock opens. In

above process, once input X is “0”, state will transfer to D at once making output Z_2 is “0”, giving an alarm. In state C and D, state keep steady no matter what X is.

The comparison result of one of the two bits of presetting codes and its corresponding opening code determines the value “0” or “1” of X. If it is identical, X will be “1”, otherwise “0”. Clock is given out by single pulse.

3) Introduction to shift registers

Shift registers consist of arrangements of flip-flops and are important in applications involving the storage and transfer of data in a digital system. A register has no specified sequence of states, and is used solely for storing and shifting data entered into it from an external source and typically possesses no characteristic internal sequence of states.

The 74LS194 is an example of a universal bidirectional (the data can be shifted either left or right) shift register in integrated circuit form. A universal shift register has both serial and parallel input and output capability. Table 5-3 is the function table of 74LS194.

Table 5-3 74LS194 function table

Function	Inputs							Outputs
	Reset	Mode		Clock Pulse	Serial		Parallel	Q_A Q_B Q_C Q_D
		S0	S1		L	R	A B C D	
Reset	L	X	X	X	X	X	X X X X	L L L L
Keep	H	X	X	L	X	X	X X X X	Q_A Q_B Q_C Q_D
Send	H	H	H	↑	X	X	a b c d	a b c d
Shift Right	H	L L	H H	↑ ↑	X X	H L	X X X X X X X X	H Q_A Q_B Q_C L Q_A Q_B Q_C
Shift Left	H	H H	L L	↑ ↑	H L	X X	X X X X X X X X	Q_B Q_C Q_D H Q_B Q_C Q_D L
Keep	H	L	L	X	X	X	X X X X	Q_A Q_B Q_C Q_D

3. Preparation Requirements

1) Design a sequential digital lock with two bits. Write down your design process and draw logic circuit diagram, indicating pin numbers. Select what you need from given ICs.
2) Know logic function and applications of 74LS194. Make clear the work principle of figure 5.6 and figure 5.8. Draw timing logic diagrams, and study out steps.

4. Experiment Requirements

1) Two-bit sequential lock circuit
   (1) Build comparing circuit, checking its function.
   (2) Construct timing network, checking if state transition is correct.
   (3) Construct code circuit, checking if it can give out a bit of code with the change of timing network state.
   (4) Connect above circuits together, testing and debugging. Inputs and outputs should be connected to LEDS.

2) Realize 7-bit parallel in/serial out by 74LS194. Circuit diagram is as following:

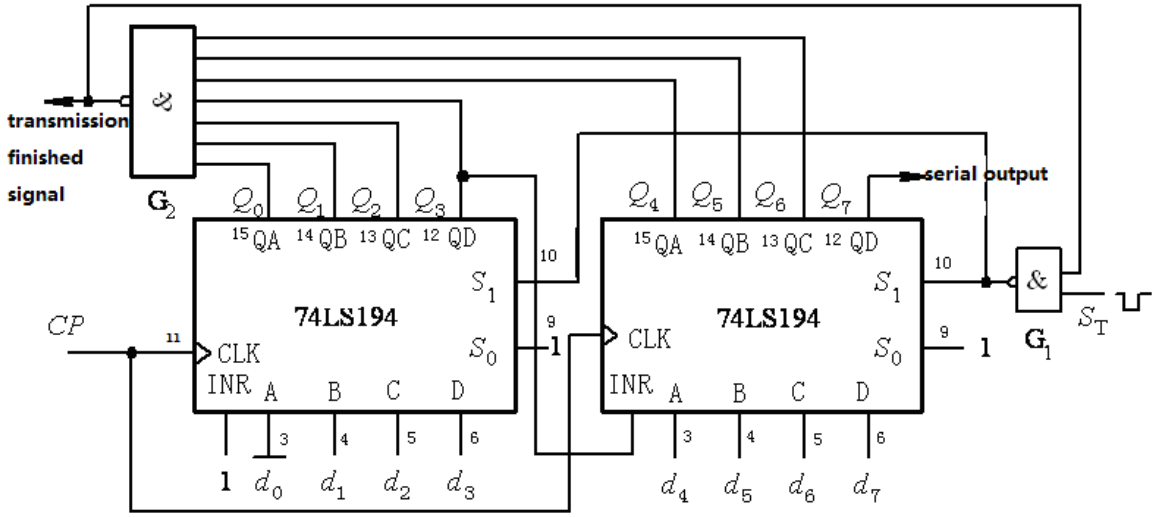

Figure 5-6 7-bit parallel in/serial out circuit diagram

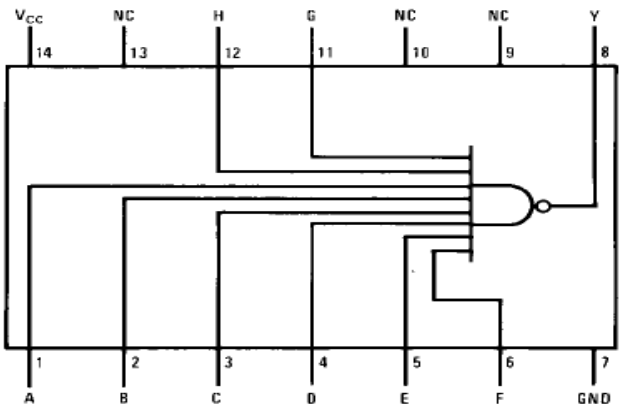

Figure 5-7 74LS30 pin out diagram

3) Realize serial in/7-bit parallel out by 74LS194. Circuit diagram is as following:

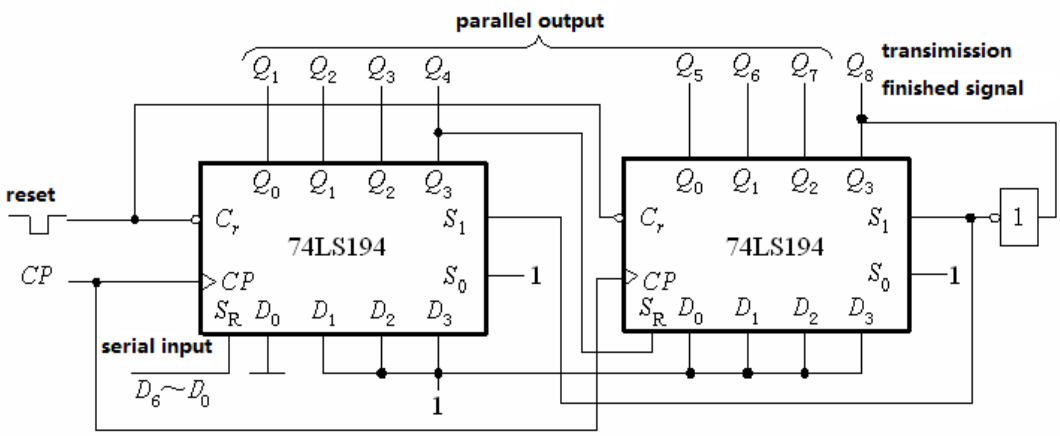

Figure 5-8 serial in/7-bit parallel out circuit diagram

5. IC's Supplied

74LS194	2 pieces
74LS74	1 piece
74LS153	1 piece
74LS86	1 piece
74LS00	1 piece
74LS02	1 piece
74LS10	1 piece
74LS30	1 piece

6. Precautions

1) Make the connections according to the IC pin-out diagram.
2) The Vcc and ground should be applied carefully at the specified pin only.
3) Switch off power while connecting or disconnecting leads.
4) Sequential lock system should give out and compare code one bit by one

7. Conclusions

1) Record results or phenomena of each part in Sequential lock system. Describe the final result of the whole system.
2) Write down testing experience for serial/parallel conversion circuits. Draw one kind of timing diagram.

Experiment 6 Digitalized Signal Generator

1. Purpose

Make an analog signal generator by D/A converter and memory. The data to produce signals are regulated by DC stabilized voltage power supply and converted by A/D, and then stored in memory.

1) Learn to use D/A and A/D converters.
2) Study and learn the usage of RAM.
3) Understand the function of bus three--state buffer.

2. Experiment Explanations

Figure 6.1 is the block diagram of digitalized signal generator. The instantaneous values of the wave to be produced are already stored in RAM according to priority. The address forming net output addressing signal under timing clock. The data in corresponding address is read out from RAM and input to D/A converter making it output analog signal value.

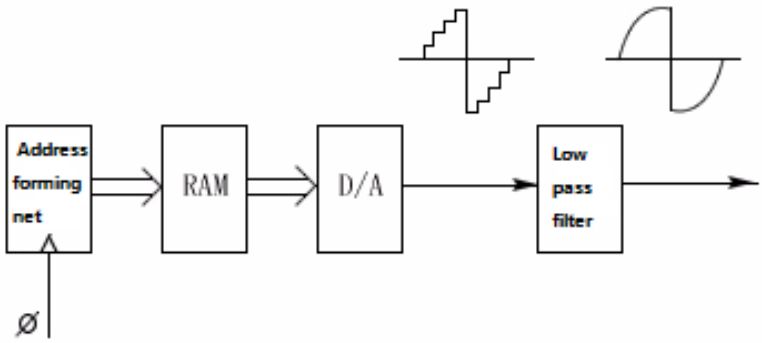

Figure 6.1 Basic block diagram of digitalized signal generator

In order to process signals using digital techniques, the incoming analog signal must be converted into digital form. Figure 6.2 shows how to store instantaneous values at different time of the wave to be produced in RAM. The wave sampling time should be identical to clock period. A new address is formed under each clock period, and the corresponding wave instantaneous value is stored in it after A/D conversion. If the voltage value input to A/D converter is different, data written to RAM is different, and relative wave produced is different.

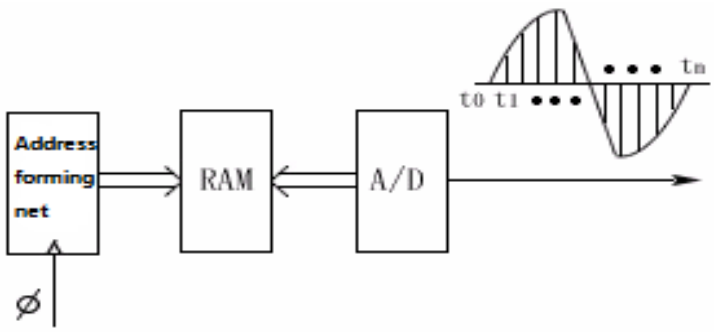

Figure 6.1 Sketch of wave data sampling

Several ICs used in this experiment are introduced here.

1) IC 2114 Static Random-Access Memory (RAM)

The RAM used in this experiment is 2114 whose pin-out diagram and framework is shown in figure 6.3. There are 1024 memory cells, and 4-bit binary code can be stored in one cell.

	Address inputs
$\overline{WE}$	Write allow
$\overline{CS}$	Chip select
I/01–I/04	Data input/output
V_{CC}	source（+5V）
GND	Ground

(a) Illustration of pin-out symbols

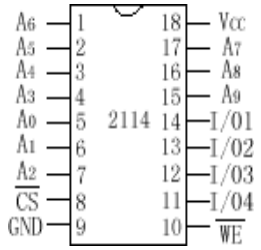

(b) pin-out diagram

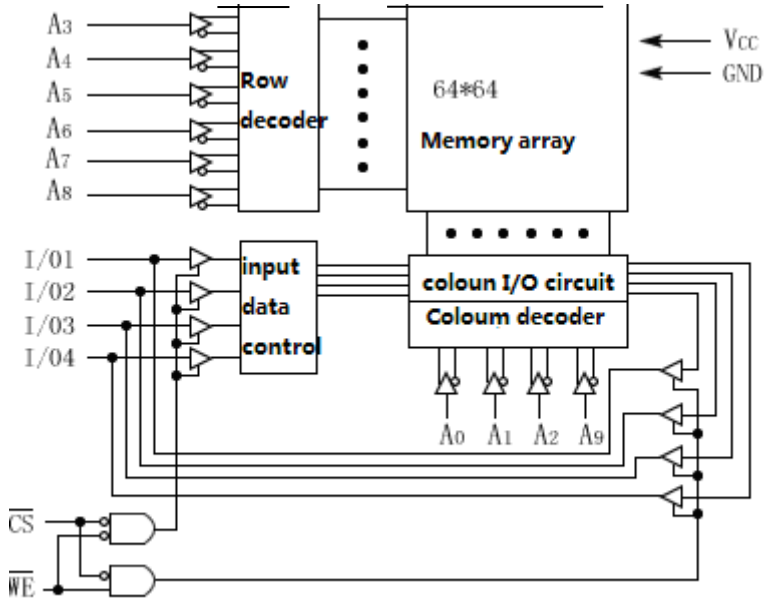

Figure6.3 Constitution block diagram

The memory cells in a SRAM are organized in rows and columns. A_0～A_9 are address inputs. Any one of 1024 memory cells can be visited by selecting different address codes A_0～A_9, reading out or writing into a 4-bit binary code D_3～D_0 which is output (when read out) or input (when write into) from I/04～I/01 separately. READ or WRITE is selected by the voltage on $\overline{WE}$. When $\overline{WE}$ is LOW, WRITE is selected, the code input from I/04～I/01 is stored in one cell. Otherwise, when $\overline{WE}$ is HIGH, READ is selected, and the code in one cell is output through I/04～I/01 while the code still keeping in it.

$\overline{CS}$ is chip selection. When it is LOW, the chip is selected, READ or WRITE can operate. When it is HIGH, the chip is not selected and will not operate, see table 6-1.In addition, pin GND to the ground, U_{CC}

Table 6-1 Read/write control

$\overline{CS}$	$\overline{WE}$	Mode
0	0	WRITE
0	1	READ
1	X	unselected

to +5V source.

When using this kind of IC, at least one of $\overline{CS}$ and $\overline{WE}$ should be in HIGH voltage during address change. Otherwise chip is in WRITE operation refreshing the code stored in cells. When $\overline{WE}$ is LOW, the voltage of address lines and data lines are must be stable.

2) DA converter DAC0832

Digital-to-analog conversion is an important part of a digital processing system. Once the digital data has been processed, it is converted back to analog form. Pin-out diagram of DAC0832 is shown in figure 6.4. It has 8 digital input terminals DI_7～DI_0 through which 8-bit binary code can be input. I_{out1} and I_{out2} are analog output terminals. When digital input is the maximum value, the output current from I_{out1} is the maximum. When input digital is zero, output current is the minimum. The two terminals can be connected to external operational amplifier. There is a feedback resistor inside the chip, which can act as the feedback resistor of the operational amplifier, and output by pin 9 (R_{fb}). The functions of other terminals are as following:

U_{CC}: to power supply, from +5～+15V, +15V is priority.

V_{REF}: to standard voltage source. It is connected with D/A conversion net inside chip, from +10V～-10V.

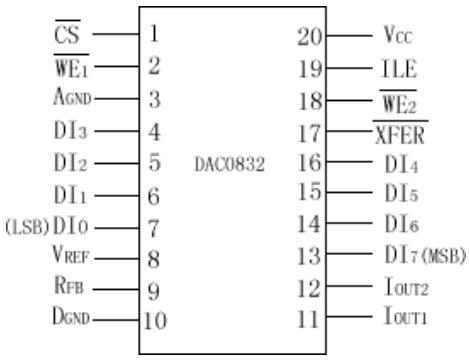

Figure 6.4 DAC0832 D/A converter

DGND: digital ground

There are also 5 control terminals:

(1) $\overline{CS}$: chip selection, LOW active

(2) ILE: input latch permit, HIGH active

(3) $\overline{WR_1}$: WRITE signal 1. When ILE is HIGH, $\overline{CS}$ is LOW, $\overline{WR_1}$ is LOW, the input digital quantity can be latched in input register.

(4) $\overline{XFER}$: control transmission signal, Low active.

(5) $\overline{WR2}$: WRITE signal 2. When $\overline{XFER}$ is LOW, $\overline{WR2}$ is LOW, it can transfer and latch the digital quantity latched in input register to DAC register.

These terminals can be used in the system with several DAC0832 to control several digital quantity conversions and output. In this experiment, ILE is HIGH, $\overline{XFER}$ and $\overline{WR2}$ to ground, $\overline{CS}$ and $\overline{WR_1}$ to ground.

Figure 6.5 shows the connection of DAC0832 and operational amplifier.

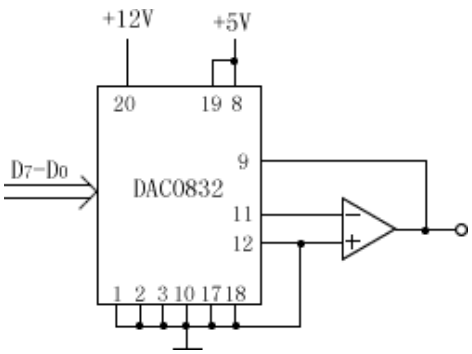

Figure 6.5 Current/voltage conversion circuit

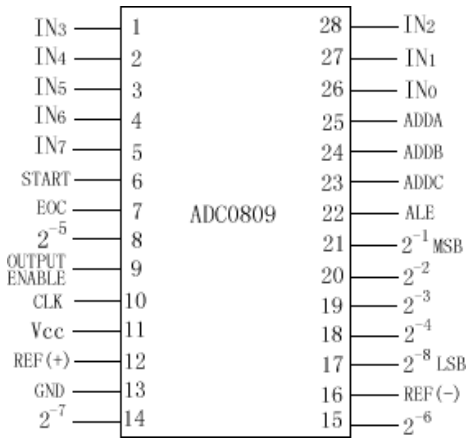

Figure 6.6 ADC0809 A/D converter

3) A/D converter ADC0809

Analog to digital conversion is the process by which an analog quantity is converted to digital form. Figure 6.6 is pin out diagram of ADC0809 A/D converter. It is an 8-bit analog to digital converter with 8 channels, and can convert 8 routes analog quantity inputs which input through IN_0～IN_7 and selected by the 3-bit binary code on ADDA, ADDB and ADDC. For example, in this experiment, only 1 signal needs conversion. If the signal goes to IN_0, the voltages input on ADDA, ADDB and ADDC all should be LOW. If the signal goes to IN_1, ADDA should be HIGH, and so on.

For this chip, U_{CC} on +5V, REF (+) and REF (-) are reference voltage inputs with the former normally on +5V, and the latter to ground. Analog voltage input ranges from 0～5V. The 8 digital quantity output terminals 2^{-1}, 2^{-2},……. 2^{-8}, are relative to reference voltage. Other control terminals are as following:

CLK: timing clock input signal.

START: start conversion signal, HIGH active. Conversion process is going on when it goes from high to low.

ALE: address input permit. Chose input analog quantity route, permitting address input, and HIGH active.

EOC: conversion finished signal. It is a output signal, and HIGH active.

OUTPUT ENABLE (OE): output permit signal. HIGH active. When it is LOW, ADC0809 output is in high-resistance state.

Figure 6.7 shows the ADC0809 conversion timing diagram.

4) 4-bus-buffer (three-state output) 74LS125

There are four buffers inside one chip, and three-state output. See appendix for its pin-out diagram. Therein, A is input, Y is output, and C is control terminal. When C is LOW, Y = A; When C is HIGH, output is disconnected and in high-resistance state.

5) 4-bit binary synchronous counter 74LS163

74LS163 is medium scale integration circuit chip. See appendix for its pin-out diagram. The function table is shown in table 6-2.

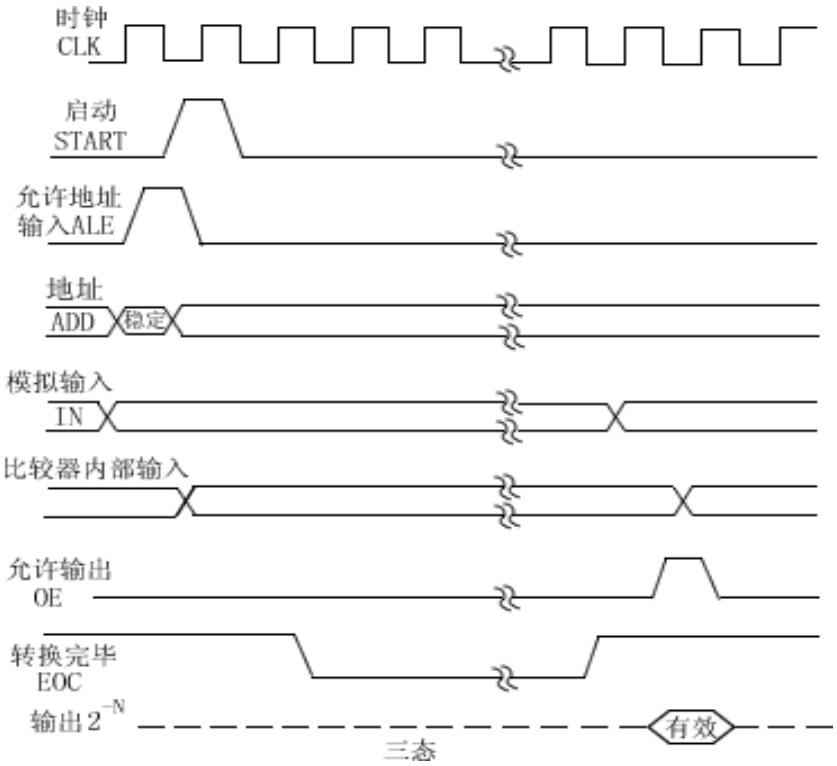

Figure 6.7 ADC0809 conversion timing diagram

From the table, it is seen that when reset CLR = 1, set LOAD = 1, and count permit P=T=1, it works at count state, and pin 15 output carry out pulse.

This chip can realize programmable counter, in which each output can be set as any voltage. When LOAD=0, outputs are identical to inputs under the next pulse. Reset of this counter is synchronous, which means reset can realize only when CLR=0 and a clock pulse coming.

Table6-2 74LS163 function table

Inputs									Outputs			
CP	CLR	LOAD	P	T	A	B	C	D	Q_A	Q_B	Q_C	Q_D
↑	0	×	×	×	×	×	×	×	0	0	0	0
↑	1	0	×	×	A	B	C	D	A	B	C	D
×	1	1	0	×	×	×	×	×	keep			
×	1	1	×	0	×	×	×	×	keep			
↑	1	1	1	1	×	×	×	×	Count			

3. Preparation Requirements

1) Design a circuit by ADC0809, 2114, 74LS125 and 4-bit binary counter 74LS163 which can convert the voltage from DC stabilized voltage source 0 ～5V to 4-bit digital quantities and store them in RAM, and check whether these voltage digital quantities stored are correct by LEDs. As the maximum number of address that 74LS163 can decode is 16, 16 voltage quantities are enough.
2) Study out a circuit by 73LS163 to test D/A converter DAC0832.
3) Design a waveform generator by 74LS163, ADC0809, DAC0832, 74LS125 and 2114 whose period of the wave produced is T, and instantaneous value is more

than zero permanently. Requirements are as following:

(1) The instantaneous values of the wave to be produced come from DC stabilized voltage source, and then ADC0809 converts them into 4-bit digital quantities and store them in 2114 in sequence. The instantaneous value can be taken in equal time interval T/15 in a whole period T.

(2) DAC0832 converts the stored digital quantities of voltage into smooth periodic analog voltage.

If you feel difficult, you can have a reference to the reference scheme at the back.

4. Experiment Contents

1) Build the A/D circuit. Convert analogue signal from DC power supply to digital quantity and store into RAM2114. Check the function of buffer 74LS125. Switch off the power and remain the circuit for further use.
2) Build the circuit for testing D/A converter DAC0832 by 74LS163. Off the power.
3) Based on steps 1 and 2, join OP-amp and filter circuit to make the circuit to produce periodic waves. Observe the “stairsteps” wave and smooth wave on CRO.
4) Selection: Produce a waveform you want to realize.
   Consideration: Whether or not a piece of 74LS163 can store/take 32 numbers?

5. IC’s Supplied

ADC0809	1pieces
DAC0832	1 piece
74LS163	1 piece
74LS125	1 piece
2114	1 piece
LM324	1 piece
Resistors	several pieces
Capacitors	several pieces

6. Precautions

1) High and low bits correspondence between chips.
2) 74LS163 CLOCK synchronous Reset.
3) LM324 power supply.
4) Unused address bus of 2114.
5) DC power and the circuit COM.
6) The clock of ADC0809 should be more than 1KHZ.

7. Conclusions

1) Write down design principle and draw logic diagram of the digitalized signal generator. Draw test results on square paper.
2) Compare the converted analog voltage with “stair steps” values to see if they are satisfied with requirements. Evaluate the precision.

8. Reference Scheme

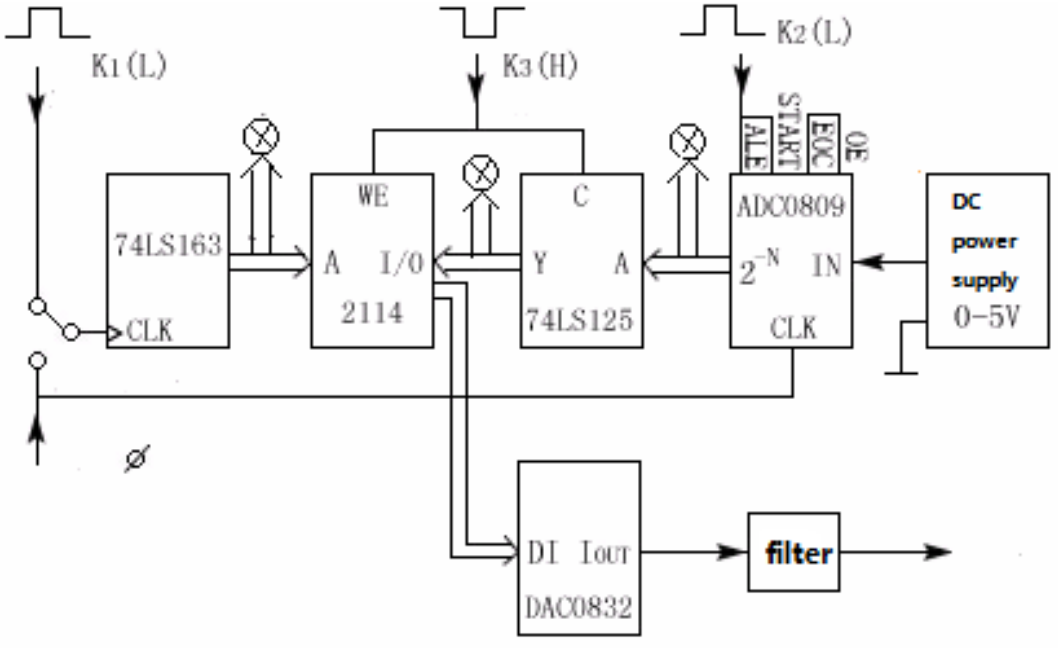
K1 (L)
K3 (H)
K2 (L)
ALE
START
EOC
OE
74LS163
CLK
WE
A
I/O
2114
C
Y
A
74LS125
ADC0809
2^{-N}
IN
CLK
DC
power
supply
0-5V
DI
IOUT
DAC0832
filter

Experiment 7 Dynamic Scan Display System Design

1. **Purpose**
   1) Know the work principle of dynamic scan display.
   2) Master design method of LED dynamic scan display driving circuit.
   3) Implement LED dynamic scan display system by integrated circuit.
2. **Work Principle**

   Normally there are two display ways, which are static display and dynamic display. Dynamic scan display is introduced here. In dynamic scan display, the display component of each bit works time-sharing circularly. If proper scan speed is selected, each of all bits is bright all the time for human eyes. For LED digitrons, due to the limitation of switch speed, each scan and lightening time of each bit is usually several milliseconds, leading to the scan speed of LED is about less than several hundreds of Hz. If the scan speed is too low, twinkling will occur in display. So the low limitation of scan speed is normally above 24Hz. Using dynamic scan can decrease hardware of drivers, reducing system power dissipation, cutting down cost.

   1) Constitution of a scan display system

   Usually, digitron display system includes two parts which are display device and decoder. In order to get dynamic display, display control circuit is also used. Typical circuit block diagram of dynamic scan display is shown in figure 6.1.

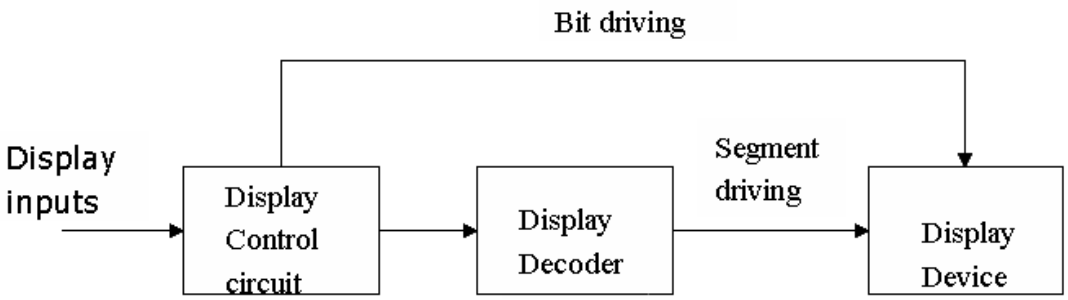

Figure6.1 Dynamic scan display system block diagram

   2) Some attentions when designing a practical display system:

   1) Clearness of characters being displayed.

      Firstly, pay attention to the relationship between the height of characters and observing distance. Usually the characters' height of LED display is 0.5cm～30cm. Secondly, there are differences between HIGH BRIGHTNESS and NORMAL BRIGHTNESS for lighting performance. Finally, pay attention to the relationship between the lighting intensity and environment, blur, fringe and twinkle.

   2) LED driving.

      Normally for small LED, each character segment is a LED, the

brightening voltage is 1.6～1.9V, the current is several to dozens of mA. For big LED, each character segment is composed of several LEDs connected in serial and the brightening current is around dozens of mA to hundreds of mA.

3) Type of display device.

Widely used display devices include all kinds of multisegments LED digitrons, segment-LCDs, character modules and all kinds of figure modules (display and driver and controller).

3) Circuit design

With the development of science and technology, designers gradually hope to use the display with driving circuit which can large simplify hardware and software design. The display component which assembles driving circuit and multi-bits display components in one module is called OBE (ON-BOARD—ELECTRONICS) display. Usually it includes multi-segments LED display, ROM, characters collection RAM, chip-in oscillator, bit counter, decoder, etc.

Here we focus on introducing the design process of multi-segments LED dynamic display system. When there are several multi-segments LED displays in a display device, dynamic scan (periodic refresh) driving circuit is usually adopted to save hard ware consumption. Two problems should be well solved: no display twinkle and enough display brightness. In order to display with no twinkle, normally higher character refresh frequency is used. Practice shows that the refresh frequency is not less than 100Hz. In order to get enough brightness, LED work current should be reasonably chosen, and based on it, the capability of drive circuit and the value of current limit resistors are chosen.

(1) Design basics

Dynamic display drive circuit is different from static drive circuit. If work current under static display is I_f (per segment), and work current under dynamic scan display is I_p, then:

$$I_p = I_f * Duty = I_f / N$$

If display period is T, the character gated frequency (usually called character refresh frequency) F=1/T. The duty of gated pulse Duty=1/N, therein N is the number of bits. Because the LED lighting efficiency under current pulse driving is higher than that under DC (Duty=1) current driving, usually $I_p < (I_f * Duty)$ when the mode of dynamic scan display is used.

(2) Driving circuit selection

In static multisegments LED display system, the common terminal is connected to power positive (common anode) or negative (common cathode), in which the character driving current is supplied by source. The main task of designers is to choose segment drive circuit. But for dynamic refresh multisegments LED system, the character driving current is supplied by character driver, in which designers should choose character driver based on maximum average character driving current.

Compared with multisegments LED display, dot array LED display can

flexibly display more characters and figures with more artistic. The drive circuit of most dot array LED display adopts row scan and column scan. Designers can choose row and column circuits or purchase OBE dot display device with drivers, memories and decoders in it.

(3) Decoder and display selection

Semiconductor 7-segment nixie tube model XXX (for example BS201), which is cathode common, can be chosen as display device. Based on specific type selected, performance parameters can be found in products manual.

Decoder is selected based on display type and character features. For example, a 4-7-line decoder 74LS49 can be chosen do display BCD codes, in which output is HIGH active (identical to common cathode nixie tube requirement) and can drive segments of small LED.

As for the connecting circuit between display and decoder, because of dynamic display, each segment a～ g of 74LS49 is connected with other segment a～ g of 7-segment display. A pull-up resistor is needed because the output of 74LS49 is OC circuit.

(4) Display control circuit selection

Main task of this part is to choose the code to be displayed and control the position. Because in dynamic display system, each tube works alternatively while only one tube is light, data selector can be used to select one code form 4-bit BCD codes to be displayed.

74LS153 can be used to realize above function, whose inputs are connected to the bits of BCD codes, and each output to decoder.

In dynamic display system, the code display position in LED tubes should be identical to the position of input code. Normally decoder is used to control by transistors or OC gates, while a switch (a transistor of OC gate) which is controlled by the decoder, is connected between the cathode of each nixie tube and ground. 2-4 line 74LS139 can act as decoder. The control inputs of decoder and data selector connect together, and can get control sequence by 2-bit counter.

(5) Notice

a. Valid voltages cooperate correctly. For display device, there are common-cathode and common-anode. Appropriate decoder and driver should be chosen to cooperate with it.
b. Enough drive capability. Configure segment and bit drive capability appropriately.
c. Scan frequency can be adjusted to change display effects.

4) Reference Circuits

1) Reference block diagram of common cathode LEDs display

4-bit common-cathode LEDs scan display reference block diagram is shown in figure 7-2. The 2 bits binary codes from the 2-bit binary counter are used to select codes displayed (BCD codes) and confirm bit (LED). 4 BCD codes are selected by 2 pieces of data selector 74LS153. 74LS49 can be used to decode from BCD code to 7-segment display. 2-4 decoder (74LS39) converts 2-bit code

to 4 bit signals, in which only one bit is active (LOW) at a time and drives relative LED bit by OC buffer (74LS07).

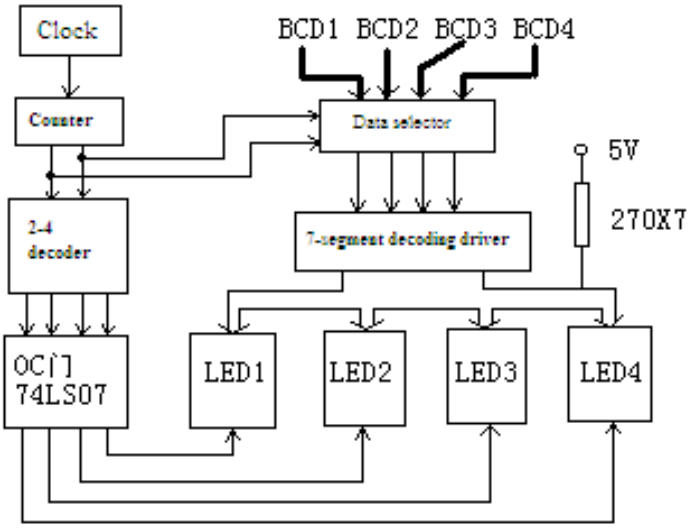

Figure 7-2 Common-cathode LEDs reference circuit block diagram

2) Reference block diagram of common anode LEDs display

4-bit common-anode LEDs scan display reference block diagram is shown in figure 7-3. 74LS47 (active LOW) acts as segments decoding driver, and PNP transistors act as bit driver. The other parts are very similar to those of common-cathode circuit.

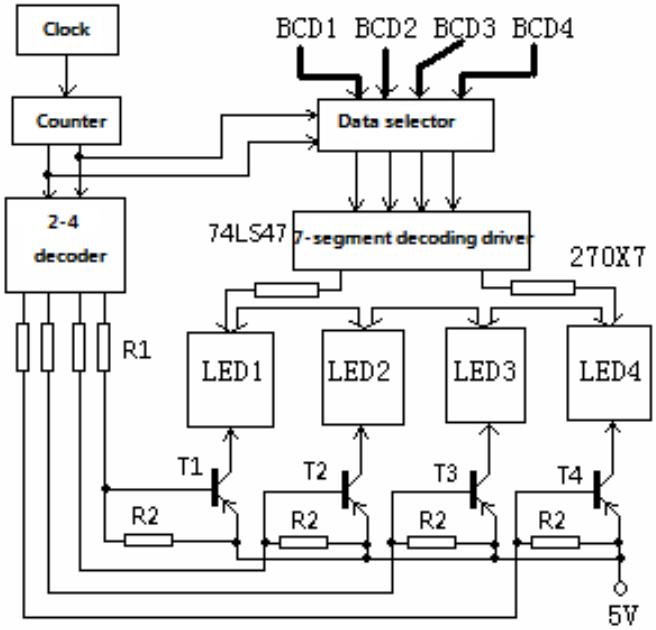

Figure 7-3 Common-anode LEDs reference circuit block diagram

5) LED nixie tubes module

The nixie tubes the lab provides is a module which combines 4 LEDs together. They share segment driving pins, which can save wires. The pin-out diagram is shown in figure 7-4. CM1, CM2, CM3 and CM4 are 4 common terminals (bit drive terminals), and they arrange from left to right. dp is radix point terminal, and other 7 terminals correspond to each segment.

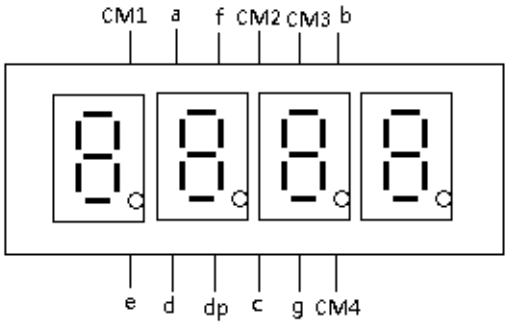

Figure 7-4 Pin-out diagram of LEDs module

3. Preparation Requirements

1) Comparing with the given LED digitrons experiment reference circuit block diagram, refer to relevant parts and components materials and finish detailed circuit design and analyze circuit work principle.
2) Design a clock circuit of a scan display by CA555.

4. Experiment Requirements

1) Design the scheme to test pins function of given nixie tubes.
2) The experiment board is shown in figure 7-5. Know and familiarize yourself with the board and components on it, and constitute the 4-bit BCD code dynamic scan display system. Adjust clock frequency and obverse phenomenon, recording and analyzing. Select the frequency with the best display effect.

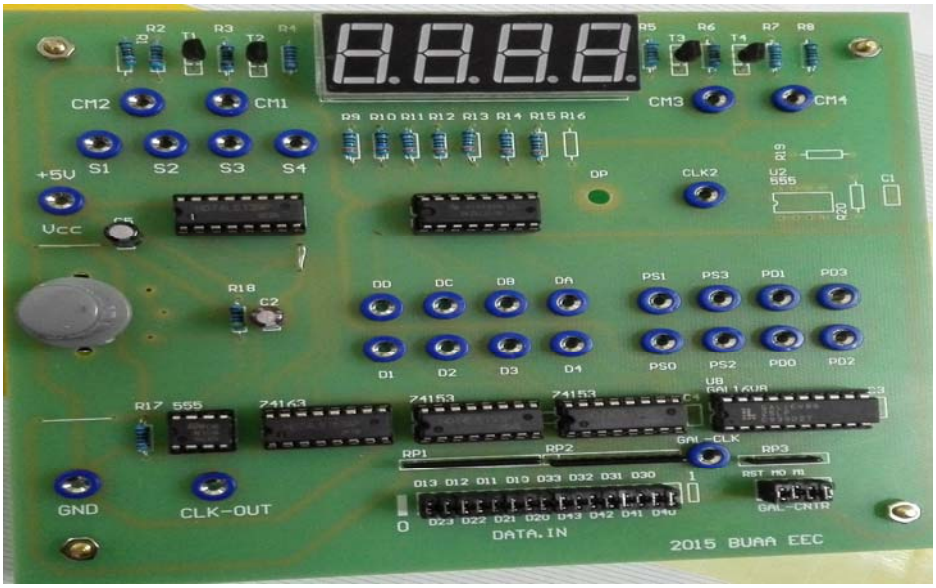

Figure 7-5 Practical experiment board

3) Use the outputs of the programmable logic device (PLD) GAL16V8 on the board to control scan display, obverse display phenomenon, and analyze the logic relation provided by PLD.

5. Apparatus Supplied

An experiment board with following components on it:

Common-anode 4-bit LED module	1 pc
74LS153	2pcs
74LS47	1pc
74LS139	1pc
74LS163	1pc
GAL16V8	1pc
CA555	1pc
Resistors	several pcs
Capacitors	several pcs

6. Precautions

1) Don't make mistakes when connecting Vcc and GND.
2) To avoid interference, **use wires as short as possible.**
3) **For MUX 74LS153, free terminals stand for HIGH level to avoid too many wires.**

7. Conclusions

1) Draw the whole circuit diagram, and simply explain design idea
2) By debugging dynamic scan display system, what do you think about it? Tell your experience.

Appendix Ⅰ Commonly Used Digital Integration Circuit

Pin-out Diagrams

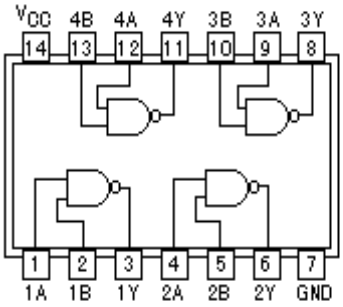

74LS00 2-input NAND gate

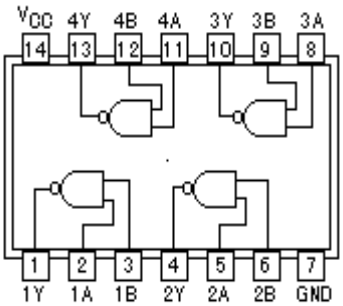

74LS01 2-input NAND gate (OC）

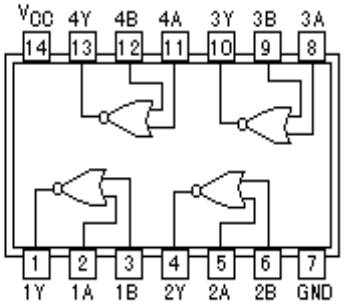

74LS02 2-input NOR gate

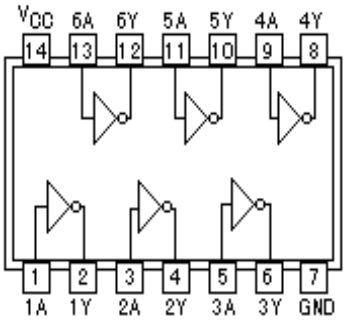

74LS04 6 NOT gates

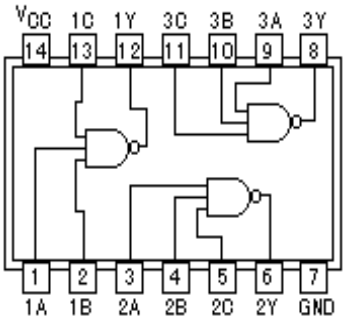

74LS10 3-input NAND gate

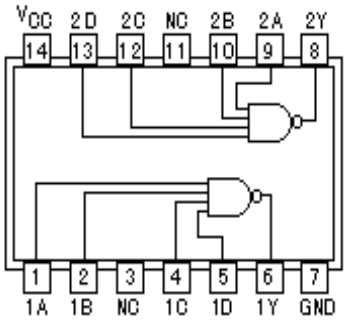

74LS20 4-input NAND gate

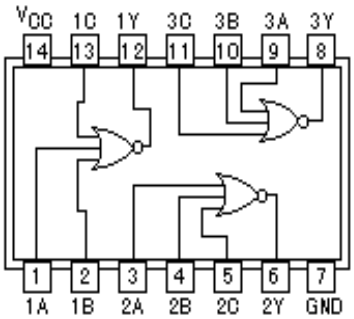

74LS27 3-input NOR gate

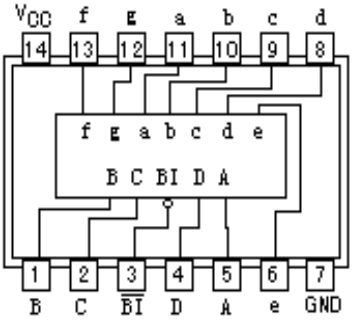

74LS49 BCD 7-segment decoder

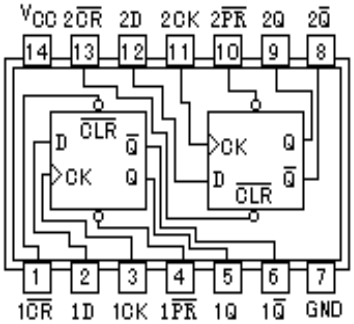

74LS74Double D flip-flops

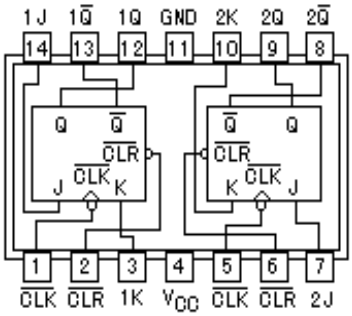

74LS73 Double J-K flip-flops

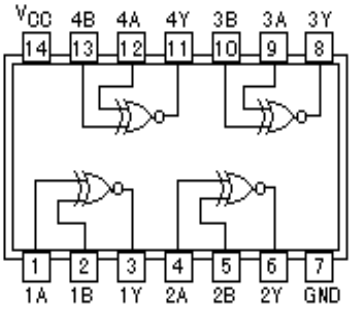

74LS86 2-input XOR gate

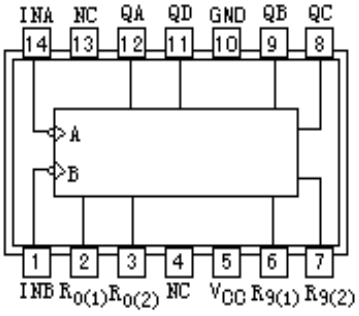

74LS90 Bi-quinary counter

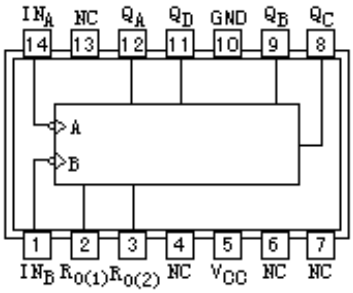

74LS93 4-bit binary counter

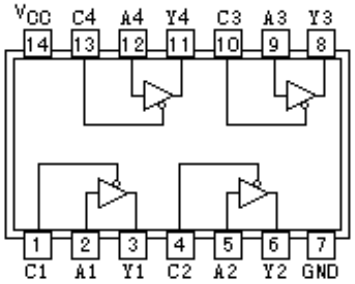

74LS125 4 three-state buffers

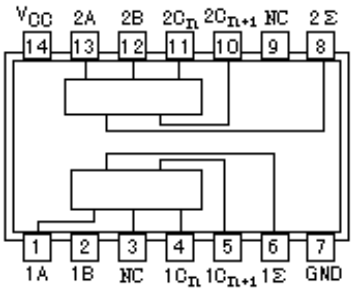

74LS183 Double full adders

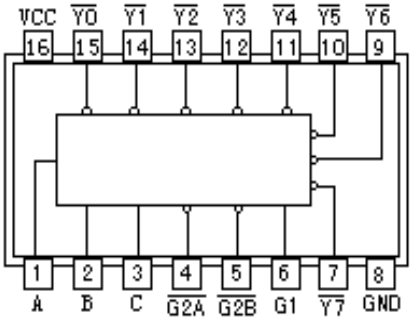

74LS138 3-8 decoder

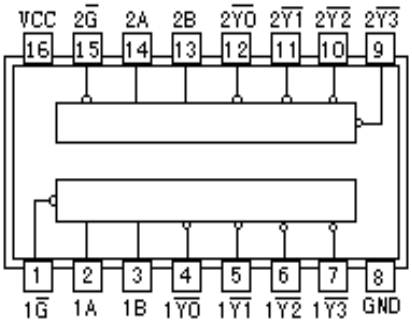

74LS139 Double 2-4 decoders

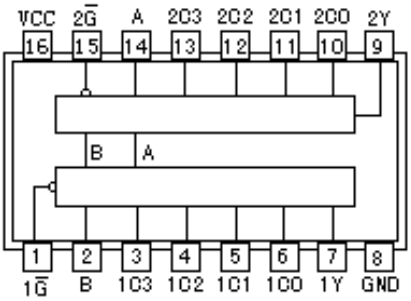

74LS153 2 1-of-4 Data selectors

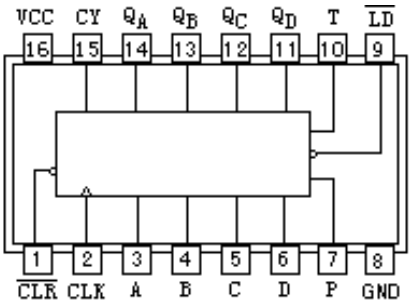

74LS163 Synchronous 4-bit binary counter

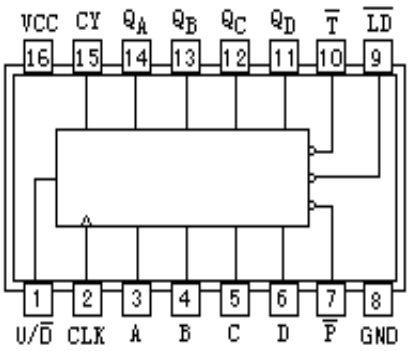

74LS169 4-bit binary reversible counter

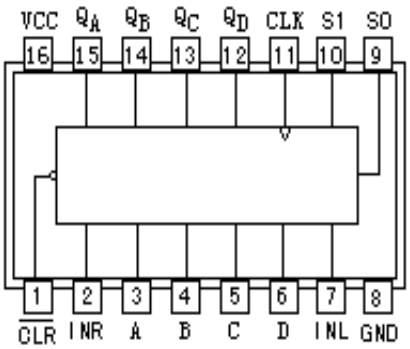

74LS194 4-bit bidirectional shift register

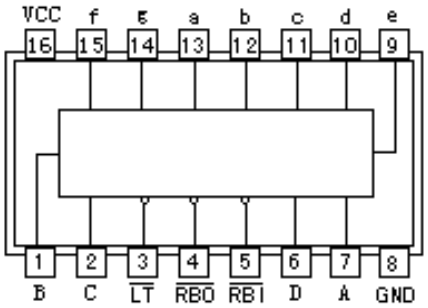

74LS248 BCD 7-segment decoder with pull up

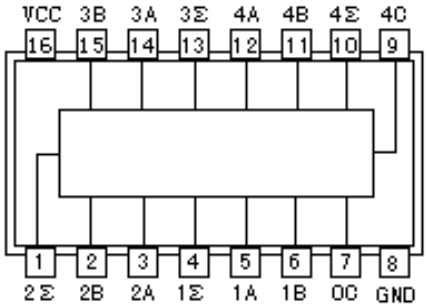

74LS283 4-bit parallel full adder

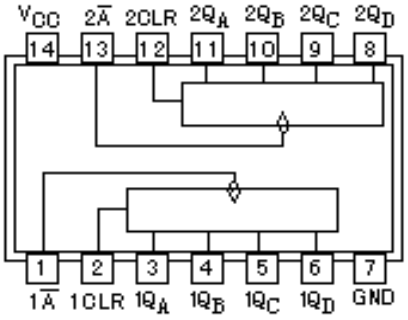

74LS393 Double 4-bit binary counters

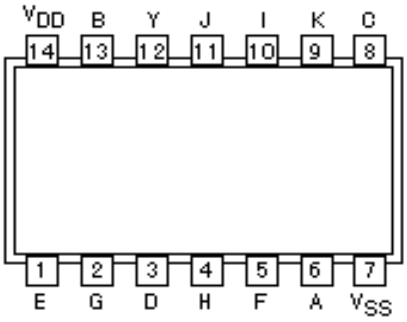

CD4007 Double complementary inverters

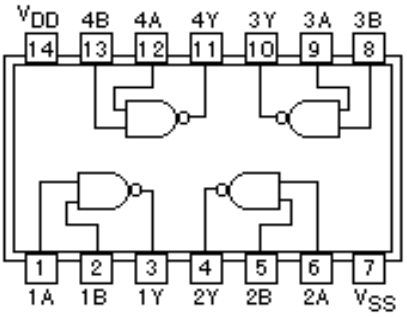

CD4011 4 2-input NAND gates

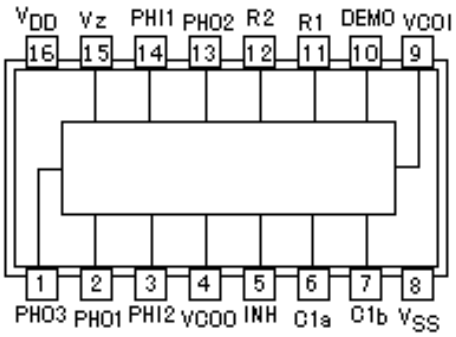

CD4046B PLL

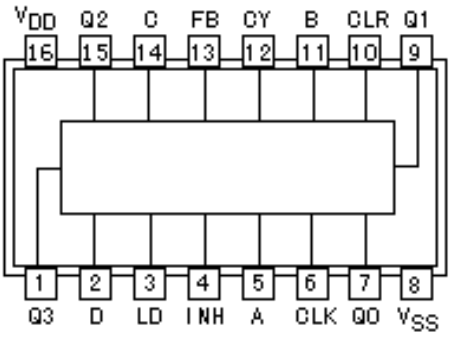

CC4526 Preset able binary 1/N counter

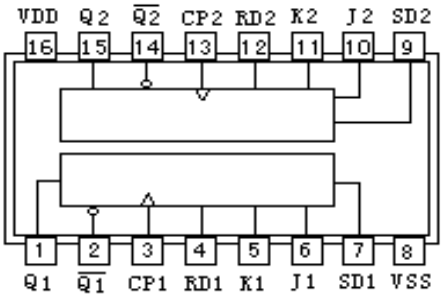

CD4027 Double J-K flip-flops